GEOSA
الهيئة العامة للمساحة والمعلومات الجيومكانية
General Authority for Survey and Geospatial Information

TECHNICAL GUIDELINES FOR LAND SURVEYING

V1.0

General Authority for Survey and Geospatial Information

Disclaimer

This document has been developed by the General Authority for Survey and Geospatial Information (GEOSA). The guidelines have been drafted with reference to various standards and guidelines considered to be international best practices, particularly from Australia, Canada, South Africa, the United Kingdom, and the United States of America. Any omissions or errors may please be notified to GEOSA.

Copyright © 2025 GEOSA All Rights Reserved

Table of Contents

1. Introduction *8*

2. Normative Elements *10*

2.1 Geodetic Reference System in the Kingdom of Saudi Arabia **11**
2.1.1 Description of Geodetic Reference System 11
2.1.2 Conversion to Saudi Arabian National Spatial Reference System (SANSRS) 11
2.1.2.1 Conformal Transformation 11
2.1.2.2 Map Projection Transformation 11

2.2 Control Surveys **12**
2.2.1 Purpose 12
2.2.2 Connection to National Geodetic Survey Network 12
2.2.3 Projection and Coordinate System 13
2.2.4 Accuracy of Control Survey 13
2.2.4.1 Expression of Accuracy 14
2.2.4.2 Horizontal Accuracy 14
2.2.4.3 Vertical Accuracy 15
2.2.5 Design of Control Survey Network 16
2.2.5.1 GNSS Horizontal Control Network 17
2.2.5.2 Classical Control Network 19
2.2.5.3 Horizontal Control Network 19
2.2.5.4 Vertical Control Network 20
2.2.6 Location of Control Survey Point 20
2.2.7 Monumentation of Control Survey Point 21
2.2.7.1 Horizontal Survey Mark Monumentation 21
2.2.7.2 Vertical Survey Mark Monumentation 24
2.2.8 Survey Records and Report 25

2.3 Engineering Surveys **26**
2.3.1 Purpose 26
2.3.2 Safe Work Practices 26
2.3.2.1 Responsibilities 26
2.3.2.2 Planning for Safety 27
2.3.2.3 Safety Meetings 27
2.3.2.4 Safety Training 27
2.3.2.5 Vehicular Traffic 27
2.3.2.6 Tools and Equipment 27
2.3.2.7 First Aid Requirements 28
2.3.2.8 Vehicle Operation 28
2.3.3 Entry to Land 28
2.3.3.1 Private Land 28
2.3.3.2 Entry Refusals 28
2.3.3.3 Public enquiries 28
2.3.4 Traffic Control 28
2.3.4.1 General Procedures 28
2.3.4.2 Lookouts 29
2.3.4.3 Flaggers 29
2.3.4.4 Protective Vehicles 30
2.3.4.5 Amber Warning Lights and Emergency Flashers 31
2.3.4.6 Temporary Traffic Control 31
2.3.4.7 Yellow-Stripe Surveys 32
2.3.5 Connection to National Geodetic Network 32
2.3.6 Accuracy Requirements 32
2.3.6.1 Expression of Accuracy 33
2.3.6.2 Survey Accuracy Bands 33

2.3.7 Pre-construction Survey 34
2.3.7.1 Survey Planning and Preparation 34
2.3.7.2 Field Survey Procedures 35
2.3.7.3 Data Processing and Analysis 35
2.3.8 Construction Survey 35
2.3.8.1 Setting-Out for Construction 35
2.3.8.1.1 Responsibility of the Setting-Out Surveyor 35
2.3.8.1.2 Setting-Out Procedures Using Coordinates 36
2.3.8.1.3 General Concepts of Staking in Road Projects 37
2.3.8.1.4 Staking in Road Projects 37
2.3.8.1.5 Heighting of Key and Intermediate Points 38
2.3.8.1.6 Offset Staking 38
2.3.8.1.7 Staking with Referencing 38
2.3.8.2 Monitoring of Construction Survey 38
2.3.8.2.1 Features to Monitor 39
2.3.8.2.2 Parameters to Monitor 39
2.3.8.2.3 Frequency and Duration 39
2.3.8.2.4 Monitoring Point Monumentation 40
2.3.8.2.5 Monitoring Technique 40
2.3.8.2.6 Data Collection and Analysis 40
2.3.8.2.7 Reporting and Communication 40
2.3.8.2.8 Quality Assurance and Compliance 40
2.3.8.2.9 Risk Management 40
2.3.8.3 Post-construction Survey (As-Built Survey) 40
2.3.8.3.1 Procedures 41
2.3.8.3.2 Route Projects 42
2.3.9 Deformation Survey 42
2.3.9.1 Deformation Surveying Design (Monitoring Plan) 43
2.3.9.2 Reference Point Monumentation 46
2.3.10 Survey Records and Report 50

2.4 Topographical Surveys (Terrestrial) 52
2.4.1 Purpose 52
2.4.2 Connection to National Geodetic Network 52
2.4.3 Accuracy Requirements for Topographical Surveys 52
2.4.3.1 Positional Accuracy of Topographical Detail 52
2.4.3.2 Elevation Accuracy 53
2.4.3.3 Accuracy of Topographical Plan/Map 53
2.4.4 Topographical Features to be Surveyed. 53
2.4.5 Topographical Plan/Map Requirements 54

2.5 Cadastral Surveys 55
2.5.1 Purpose 55
2.5.2 Compliance with Legislation 55
2.5.3 Connection to National Geodetic Network 55
2.5.4 Cadastral Boundary 55
2.5.4.1 Straight-line Boundary 55
2.5.4.2 Circular-line Boundary 56
2.5.4.3 Streamline Boundary 56
2.5.4.4 Coastal Boundary 56
2.5.4.5 Other Natural Feature Boundary 57
2.5.5 Monumentation 57
2.5.6 Survey for Subdivision of Land 58
2.5.7 Re-establishment of Cadastral Boundary Survey 58
2.5.8 Accuracy Requirements 58
2.5.9 Consolidation of Land Parcels 59
2.5.10 Building Unit Surveys 59
2.5.11 Oil and Gas Surveys 60

2.5.12 Mining Surveys 61
2.5 13 Surveys of Third-Party Rights in Land 61
2.5.14 Determination of Area 61
2.5.15 Cadastral Plan 62
2.5.15.1 Cadastral General Plan 63
2.5.16 Survey Records and Reports 64
2.5.17 Approval of Cadastral Survey 65
2.5.18 Professional Responsibility 65
2.5.19 Cadastral Surveys – General 66

2.6 Land Surveying Methods 67
2.6.1 Purpose 67
2.6.2 Global Navigation Satellite System (GNSS) 67
2.6.2.1 General Considerations 67
2.6.2.1.1 Static Surveys 68
2.6.2.1.2 Real-Time Surveys 68
2.6.2.2 GNSS Equipment and Observation Techniques 68
2.6.2.2.1 Static Surveys 68
2.6.2.2.2 Real-Time Surveys 69
2.6.2.3 GNSS Processing Procedures 71
2.6.2.3.1 Static Surveys 71
2.6.3 Optical Surveying Methods 71
2.6.3.1 Total Positioning System (TPS) 71
2.6.3.1.1 Equipment 71
2.6.3.1.2 Survey Procedures 73
2.6.3.2 Differential Digital Levelling 73
2.6.3.2.1 Differential Levelling Equipment 73
2.6.3.2.2 Differential Levelling Observation Techniques 74
2.6.3.3 Total Station Differential Levelling 75
2.6.3.3.1 Total Station Differential Levelling Equipment 75
2.6.3.3.2 Total Station Differential Levelling Observation Techniques 75
2.6.4 Remote Sensing and Imaging Methods 76
2.6.4.1 Photogrammetry 76
2.6.4.2 Unmanned Aerial Vehicle (UAV) 76
2.6.4.3 Ortho-Imagery for Cadastral Surveys 77
2.6.5 Terrestrial 3D Laser Scanning (Stationary) 77
2.6.6 Laser Distance Meter (hand-held) 78
2.6.7 Mobile Mapping System 78

3. Supplementary Informative Elements 80

3.1 Kingdom of Saudi Arabian (KSA) National Geospatial Feature Concept Dictionary 81

3.2 Secondary Topographical Feature List 88

3.3 Symbols, Acronyms and Abbreviations 93

3.4 References 95

List of Figures

Figure 1: Survey Control Mark Brass Plaque Design Details 22
Figure 2: Survey Control Mark Brass Plaque Placement Details in Existing Curb or Rock 23
Figure 3: Deep Seated Permanent Survey Control Mark 24
Figure 4: Setting Out from Control Points. 36
Figure 5: Setting Out by Intersection. 37
Figure 6: Deformation Survey Data Flow. 43
Figure 7: Reference Point Monumentation. Concrete Pier Construction Vicinity of a Lock and Dam. Forced Centering Plug Set into Concrete Pier 47
Figure 8: Reference Point Monumentation. Detail for Reinforced Concrete Pile or Steel Pile Construction 47

Figure 9: Target Plug Set on Concrete Structure. Forced Centering Device on Tribrach Shown Upside Down 49
Figure 10: External Deep-Driven Benchmark Design—for Vertical Control Only 50
Figure 11: GNSS Survey Techniques 67

List of Tables

Table 1: Terms and Definitions 9
Table 2: Control Survey Horizontal Accuracy Standard 14
Table 3: Control Survey Vertical Accuracy Standard 15
Table 4: Orders of Accuracy for Control Surveys 16
Table 5: Minimum Standards for Horizontal Control Survey Design, Geometry, Connection, and Observing Criteria 18
Table 6: Shadow Vehicle Roll Ahead After Impact 30
Table 7: Survey Detail Accuracy Band Table 34
Table 8: Positional Accuracy of Topographical Detail 52
Table 9: GNSS Observation Techniques for Static and Fast Static Surveys to Achieve Nominated Levels of Local Accuracy 69
Table 10: GNSS Equipment and Observation Techniques for Real-Time Surveys 70
Table 11: Minimum GNSS Processing Software Recommendations for Static and Fast Static Surveys 71
Table 12: Equipment Recommendations 72
Table 13: Observation Techniques 73
Table 14: Differential Levelling Equipment Recommendations 73
Table 15: Differential Levelling Observation Techniques 74
Table 16: Total Station Levelling Equipment Recommendations 75
Table 17: Total Station Differential Levelling Observation Techniques 76
Table 18: Technical Requirements for Mobile Mapping System 79
Table 19: KSA Feature Concept Register (as of December 2022) 81
Table 20: KSA Foundation Themes with Theme Identifier 87
Table 21: Topographic Features - Adapted from Landmark Symbols for Topographic Maps at 1:1000. 88

Foreword

The General Authority for Survey and Geospatial Information (GEOSA) is the national mapping agency of the Kingdom of Saudi Arabia (KSA). These Guidelines are a vital framework that aligns the Kingdom's geospatial data management practices with international and national standards. This will help industry, academia, and government bodies in KSA with survey and geospatial data collection and dissemination based on international best practices. The geospatial guidelines are derived from International and National Standards and then applied to develop guidelines and Standard Operating Procedures (SOPs) for various geospatial and remote sensing data forms. This structured approach ensures that survey and geospatial data collected and managed in KSA adhere to international and national standards, leading to data consistency, reliability, and compatibility.

The Guidelines for Land Surveying for the Kingdom of Saudi Arabia will be maintained and updated by the GEOSA.

The Guidelines cover four components:

- Control Surveys.
- Engineering Surveys.
- Topographical Surveys (Terrestrial).
- Cadastral Surveys.

The Guidelines for Land Surveying apply to all land surveying activities and processes. They are developed primarily for surveyors, both in the public and private sectors, undertaking land surveying projects in the Kingdom of Saudi Arabia. These guidelines can also be useful for those working in the infrastructure development, agricultural, and land sectors.

The Guidelines for Land Surveying are aligned with the National Geospatial Data Policies and Standards for the Kingdom of Saudi Arabia (). The Guidelines for Geodesy for the Kingdom of Saudi Arabia () apply to the Land Surveying Guidelines.

Changes to this Guidelines will be instructed by the GEOSA, as improvements or amendments are identified.

1. Introduction

Scope and Objectives of the Guideline

The Land Surveying Guidelines cover the guidelines for four components, namely:

- Control Surveys,
- Engineering Surveys,
- Topographical Surveys (Terrestrial),
- Cadastral Surveys.

The Land Surveying Guidelines provide for both mandatory and informative aspects of Guidelines for the four components of Land Surveying practiced in the Kingdom of Saudi Arabia.

Notably, these Guidelines do not extend to the surveying of international boundaries or administrative areas. Additionally, Guidelines for marine cadastre are not within the scope of these Guidelines.

Terms and Definitions

Table 1: Terms and Definitions

Term	Definition
Guidelines for Land Surveying for the Kingdom of Saudi Arabia	The name of the Guidelines described in this document
Land Surveying Guidelines	The short name of the Guidelines described in this document
UTM Projection	Universal Transverse Mercator (UTM) is a map projection system for assigning coordinates to locations on the surface of the Earth, usually expressed as Eastings and Northings.
Map projection	A map or geographic projection is a broad set of transformations employed to represent the curved two-dimensional surface of a globe on a plane, often expressed as latitude and longitude.

2. Normative Elements

Land Surveying Guidelines

This section provides a detailed description of the guidelines for national land surveying concepts, activities, and methods; it should give users a better understanding of the following areas:

- Geodetic Reference Systems in the Kingdom of Saudi Arabia,
- Control Surveys,
- Engineering Surveys,
- Topographical Surveys (Terrestrial),
- Cadastral Surveys,
- Land Surveying Methods.

2.1 Geodetic Reference System in the Kingdom of Saudi Arabia

2.1.1 Description of Geodetic Reference System

The official geodetic reference system for the Kingdom of Saudi Arabia is the Saudi Arabia National Spatial Reference System (SANSRS). The SANSRS specifies the Kingdom of Saudi Arabia – National Geodetic Reference Frame (KSA-GRF) with horizontal datum and the Kingdom of Saudi Arabia – National Vertical Reference Frame (KSA-VRF) (height datum). Refer to the Guidelines for Geodesy for the Kingdom of Saudi Arabia ().

2.1.2 Conversion to Saudi Arabian National Spatial Reference System (SANSRS)

All land surveys must be in the SANSRS using the UTM Projection system (Eastings, Northings). In cases where previous surveys were not done based on SANSRS, then the coordinates of points must be converted to the SANSRS. No surveys, with resulting geospatial information, will be accepted if not in SANSRS. The conversion method used will be dependent on the system used in the previous survey or in which system the coordinates are given. The following methods could be used.

2.1.2.1 Conformal Transformation

Where at least three common points exist in the non-SANSRS system and the SANSRS system, a 7-parameter Helmert transformation may be performed to convert the coordinates of points in the non-SANSRS system to coordinates in the SANSRS system. With the proviso, that the three common points are well distributed across the area of the points to be converted, and no extrapolation of data points occurs.

2.1.2.2 Map Projection Transformation

Where points are to be transformed from a map projection system to the UTM Projection, the mathematical transformation is to be done using the respective projection formulae to transform the coordinates in a two-part transformation: $(X_1, Y_1) \rightarrow (\phi, \lambda) \rightarrow (E_{UTM}, N_{UTM})$. The result then is the Easting, Northing coordinates in the UTM Projection.

Note: In particular circumstances where it is more appropriate to use an alternative map projection to the UTM then the Lambert's Conical Conform Projection with Two Standards Parallels may be used. The standard parallels must be selected with the northern standard parallel being one-sixth (⅙) of the distance from the northern boundary, and the southern standard parallel being one-sixth (⅙) of the distance from the southern boundary of the zone. For land surveys requiring a higher accuracy where the projection distortion must not exceed 340 p.p.m. then the zone must not exceed 4 degrees in latitude.

2.2 Control Surveys

2.2.1 Purpose

Control Surveys are performed to ascertain the position of a designated point (control point) in terms of horizontal, vertical, or both horizontal and vertical coordinates, usually marked with a monument. These control points play a crucial role in providing the necessary reference for diverse survey projects. These control surveys are a breakdown of control points from the National Geodetic Network, often referred to as tertiary or quaternary control networks.

Control Surveys are currently used for the following purposes by stakeholders:

- Ground control points,
- Map production,
- Ground control for agriculture subdivision,
- To locate the lands belonging to the organization precisely,
- To connect the project in one environment. Also, to connect the local site with the international coordinates,
- Image correction,
- Pipeline survey,
- Mobile mapping,
- Cadastral survey,
- Construction of a road network and other infrastructure development.

This section offers guidance on several essential considerations for conducting Control Surveys, encompassing.

- Connection to KSA National Geodetic Survey Network,
- KSA Projection and Coordinate System,
- Accuracy of Control Survey,
- Design of Control Survey Network,
- Location of Control Survey Point,
- Monumentation of Control Survey Point, and
- Survey Records and Report.

2.2.2 Connection to National Geodetic Survey Network

To establish a connection between a control survey and the SANSRS, surveyors must follow these steps:

- **Instrumentation and Observations:**
  - Utilize high-precision surveying instruments and techniques for data collection. Common methods include the Global Navigation Satellite System (GNSS), total stations, and leveling instruments.
  - Follow the established procedures described in Section 2.6 for observing control points, ensuring adequate redundancy and spatial distribution.
- **Geodetic Control Points:**
  - Identify and utilize existing geodetic survey marks or Continuously Operating Reference Station (CORS) established by the GEOSA. Connecting to these marks enhances the survey's accuracy and alignment with the SANSRS.
  - When connecting survey areas to CORS, long baselines may need to be determined, particularly if the nearest CORS is up to 100km distance from the survey area. To ensure consistency and enhance stochastic modeling in network adjustments, it is recommended to establish a 'zero order' network linking three or four primary control points to the CORS network. These primary points should be fixed with precision values and utilized for the primary survey.

- If feasible, when conducting a traverse survey with a total station or geodetic level, starting and ending survey marks should be selected from the geodetic network database.

- **Data Processing:**
  - Process the collected survey data using appropriate software. Apply necessary adjustments, corrections, and transformations based on the national geodetic standards.
  - Ensure that coordinate and height computations consider the latest version of the Kingdom of Saudi Arabia – Geodetic Reference Frame (KSA-GRF) and the Kingdom of Saudi Arabia – Vertical Reference Frame (KSA-VRF).
- **Adjustment:**
  - Perform a rigorous network adjustment to enhance the overall reliability of the control survey. This step helps minimize errors and ensures consistency with the National Geodetic Reference Frame (NGRF).

2.2.3 Projection and Coordinate System

The Universal Transverse Mercator (UTM) projection is utilized across diverse zones to project SANSRS geodetic coordinates, enabling the allocation of projection coordinates across the Kingdom of Saudi Arabia (Ministry for Transport and Logistic Services, 2023). Specifically, Zones 36N, 37N, 38N, 39N, and 40N are employed. Additionally, to ensure seamless compatibility with a range of surveying, geodetic, and GIS software, all SANSRS components have been registered in the European Petroleum Survey Group (EPSG) registry:

- UTM Zone 36N: EPSG:9356
- UTM Zone 37N: EPSG:9357
- UTM Zone 38N: EPSG:9358
- UTM Zone 39N: EPSG:9359
- UTM Zone 40N: EPSG:9360

2.2.4 Accuracy of Control Survey

The quality of a Control Survey shall be quantified in terms of accuracy in order to be consistent with the International Organization for Standardization (ISO) definition (Joint Committee for Guides in Meteorology, JCGM, 2020). When quantifying survey quality, the following accuracy categories shall apply (Federal Geographic Data Committee, FGDC, 1998):

- Local Accuracy is the accuracy of the horizontal and/or vertical coordinates of a survey control mark relative to the survey in which it was observed and is free from the influence of any imprecision or inaccuracy in the underlying datum realization. Therefore, local accuracy reflects only the accuracy resulting from survey measurements, measurement precisions, network geometry, and the choice of constraints.
- Network Accuracy is the accuracy of the horizontal and/or vertical coordinates of a survey control mark with respect to the defined datum and represents the combined accuracy of the existing datum realization and the new control survey. That is, network accuracy includes local accuracy as well as the accuracy of the existing survey control marks to which a new control survey is connected.

A least squares adjustment is the most rigorous way to estimate and test the accuracy. For local accuracy, a minimally constrained adjustment should be used. For network accuracy a fully constrained adjustment should be used, however, the control should not be fixed, but rather constrained using the variance matrix from the national adjustment.

The Guideline for Geodesy for the Kingdom of Saudi Arabia Annex A () provides the methodology for defining local and network accuracy as well as a worked example on how to compute accuracy from previous definitions based on Class and Order.

2.2.4.1 Expression of Accuracy

Local and network accuracy shall be expressed in terms of the 95% confidence level using any one of the following methods (Intergovernmental Committee on Surveying and Mapping, ICSM, 2020):

- Standard deviations,
- Standard error ellipse/ellipsoid; or
- Horizontal circular confidence region.

To express standard deviations for one-dimensional components at the 95% confidence level, the uncertainty value is simply computed by scaling the estimated (1 sigma) standard deviation by coverage factor k = 1.960.

To express the (two dimensional) standard error ellipse at the 95% confidence level, the axes of the 95% error ellipse are obtained by scaling the (1 sigma) axes by coverage factor k = 2.448.

Similarly, the axes of the (three-dimensional) 95% error ellipsoid are obtained by scaling the (1 sigma) axes by coverage factor k = 2.796.

For the horizontal circular confidence region, the 95% uncertainty value is calculated from the standard (1 sigma) error ellipse and is expressed as a single quantity, being the radius of the circular confidence region. The radius (r) of the circular confidence region is computed by:

$$r = a * K$$
$$K = q_0 + q_1 C + q_2 C^2 + q_3 C^3$$
$$C = b / a$$

Where:

a = semi-major axis of the standard error ellipse
b = semi-minor axis of the standard error ellipse
q_0 = 1.960790
q_1 = 0.004071
q_2 = 0.114276
q_3 = 0.371625

Values for *a* and *b* shall be derived from the full *a-posteriori* variance matrix obtained from the least squares adjustment.

2.2.4.2 Horizontal Accuracy

The Control Survey horizontal accuracy standard (Table 2) is the following (Federal Geographic Data Committee, FGDC, 1998):

Table 2: Control Survey Horizontal Accuracy Standard

Horizontal Accuracy Standard	
Accuracy Classification **Less Than or Equal to:**	95-Percent Confidence
2-Centimeter	0.020 m
5-Centimeter	0.050 m

There are several techniques accepted for determining the coordinates of Survey Control marks. The technique adopted for a survey will depend on a number of factors, such as the required accuracy, the surrounding environment, the extent of the area to be covered, and the limitations and advantages of each technique.

The available options for conducting a GNSS Control Survey encompass Static, Fast Static, Single Reference Station Real-Time Kinematic (RTK), and Network RTK methods. Each technique offers varying accuracy levels to align with the specific accuracy requirements of the Control Survey project.

When performing a conventional traverse survey, the type of total station, ancillary equipment, and surveying procedures all have a direct influence on the survey measurements and thus, the derived Survey Control mark coordinates and uncertainties.

For a comprehensive exploration of the techniques and instruments, please refer to Section 2.6.

2.2.4.3 Vertical Accuracy

The control survey vertical accuracy standard (Table 3) is the following (Federal Geographic Data Committee, FGDC, 1998):

Table 3: Control Survey Vertical Accuracy Standard

Vertical Accuracy Standard	
Accuracy Classification **Less Than or Equal to:**	95-Percent Confidence
1-Centimeter	0.010 m
2-Centimeter	0.020 m
5-Centimeter	0.050 m

There are several techniques accepted for determining the heights of Survey Control marks. The technique adopted for a survey will depend on several factors, such as the required accuracy, the surrounding environment, the extent of the area to be covered, and the limitations and advantages of each technique.

- To achieve 1-centimeter vertical accuracies, differential leveling is required. When performing this technique, the categorization of height differences between Survey Control marks is grouped into three general classifications based on allowable survey misclosure:
    - 2 mm * √k (km)
    - 6 mm * √k (km)
    - 12 mm * √k (km)

  where k is the leveled distance in km units.

Differential leveling, utilizing either an optical or digital level instrument in conjunction with a graduate-level staff, represents the conventional method for measuring height differences between survey control marks.

An accepted variant of this conventional method is Total Station Differential Levelling, where distinctions in height are ascertained through a series of zenith angle and slope distance observations to prisms mounted on fixed-height poles. This technique mirrors the process of conventional two-way differential leveling, emphasizing precision in height determination while incorporating the technological advancements offered by total station instruments.

- To achieve 2-centimeter vertical accuracies, GNSS Static and Fast Static methods are also permitted to provide relative accuracy over a limited project extent (Geoid accuracy dependent). Each technique offers varying accuracy levels to align with the specific accuracy requirements of the Control Survey project.

- To achieve 5-centimeter vertical accuracies, GNSS Single Reference Station RTK, and Network RTK methods are also permitted. Each technique offers varying accuracy levels to align with the specific accuracy requirements of the Control Survey project.

Table 4 provides a summary of the classification described above (California Department of Transportation, CALTRANS, 2015).

Table 4: Orders of Accuracy for Control Surveys

Accuracy	**Standards**		**Procedures**			
	Positional accuracy		Monument spacing		Survey methods	
	Horizontal	Vertical	Horizontal	Vertical	Horizontal	Vertical
1-cm Network Accuracy	-	Equivalent to Second Order, Class I proportional standards	-	Average Spacing 1.6 km. Maximum Spacing 3 km	-	Differential: Digital level with Invar bar code rod / Total Station Traverse
2-cm Network Accuracy	-	Equivalent to Third Order Proportional Accuracy	570 m	Average Spacing 7 km	GNSS: Static/ Fast Static. Total Station Traverse	GNSS: Static/ Fast Static (Geoid accuracy dependent). Differential: Digital or Optical level with standard rod / Total Station Traverse
2-cm Local Accuracy	0.020 m or less 95% confidence circle Local Accuracy	Equivalent to Third Order Proportional Accuracy	140 m	Maximum Spacing 13 km	GNSS: Static/ Fast Static. Total Station Traverse	GNSS: Static/ Fast Static Static (Geoid accuracy dependent). Differential: Digital or Optical level with standard rod / Total Station Traverse
5-cm Local Accuracy	0.050 m or less 95% confidence circle Local Accuracy	N/A	N/A	N/A	GNSS: Static / Fast Static / RTK / NRTK. Total Station Traverse	GNSS: Static / Fast Static / RTK / NRTK. Differential: Digital or Optical level with standard rod / Total Station Traverse

For a comprehensive exploration of the techniques and instruments, please refer to Section 2.6**Error! Reference source not found.**.

2.2.5 Design of Control Survey Network

The design of a Control Survey Network must consider the following: (Federal Geographic Data Committee, FGDC, 1984):

1. Network Geometry Adherence:
   - The control survey network design must strictly adhere to the "Network Geometry" requirements of the chosen measurement system (i.e., GNSS, total station, or geodetic level).
2. Connection to Control Points:
   - Establishing connections to previously defined control points is mandatory to ensure alignment with the SANSRS. Failure to establish these connections is unacceptable.
3. Number of Connections:
   - The requirements must explicitly define the minimum number of connections to existing control points to fortify network geometry and enable multiple closure checks for enhanced accuracy.
4. Key Principles for Robust Design:
   - The network design must follow key principles, including:
     - Placing control points of adequate quality in close proximity to the project area.
     - Prioritizing good network geometry.
     - Incorporating redundancy within the network.
     - Selecting marks in low multipath environments when using GNSS.
     - Vigilantly avoiding logistical constraints that might compromise the network design and methodology.
5. Compliance Verification:
   - The adherence to these design requirements will be subject to rigorous verification during the project review process. Non-compliance will require immediate corrective action.

The following sections describe the methods for formulating survey control networks.

2.2.5.1 GNSS Horizontal Control Network

A diverse range of survey configuration methods can be employed to enhance project control through static and/or kinematic GNSS survey techniques. Unlike traditional terrestrial surveying methods such as triangulation, trilateration, and total station traverse, the shape or geometry of the GNSS network design is generally less significant. The following criteria must be considered for the network design (US Army Corps of Engineers, USACE, 2011):

1. **Project Size:** The size of a project significantly influences the shape of the GNSS survey network. Road construction projects are often narrow laterally but extend for kilometers longitudinally, presenting different challenges than reservoir/recreation projects, which may project equally in length and breadth.
2. **Required Density of Control**: The spacing of control points in survey projects depends on supplemental purposes such as photogrammetric mapping, GIS mapping, or construction needs. The type of GNSS survey scheme used will depend on the number and spacing of points to be established, which again is a project-specific requirement. Often, a combination of GNSS, static GNSS, and RTK will prove to be the most cost-effective approach.
3. **SANSRS Connections:** The connection of newly established GNSS survey marks into the SANSRS is mandatory.
4. **Project Accuracy Requirements:** The foremost consideration in network design is achieving the most economical coverage within the prescribed project accuracy requirements. The optimal network design strives for a minimum amount of baseline/loop redundancy without unnecessary “over-observation”. Attaining this balance is challenging and subject to change due to evolving GNSS technology and satellite coverage.

5. **Multiple/Repeat/Independent baseline connections:** Observations of not less than two repeat baseline occupations in a project should be conducted, or at least 10% of the baselines in a project should be double observed, whichever is less. Adding redundant baseline occupations may prove prudent on some remote projects where accessibility is difficult. In addition, observing the same baselines at different times and satellite configurations provides a good quality control check. When vertical control densification is performed, then all baselines shall be observed at least twice.

6. **Independent Baselines:** When 3 or more receivers simultaneously occupy stations on a network, baselines can be formed from each pair of receivers. However, not all these baselines are independent or "nontrivial." The "dependent" baselines are considered "trivial" since they do not provide a unique solution. For example, if 4 receivers are deployed, 6 baselines are formed by these receivers. Only 3 of these lines are "independent", the other 3 are "trivial" or dependent. The number of total baselines and independent baselines can be computed from the following:

   Number of Baselines per Session = N (N - 1) / 2
   Number of Independent Baselines per Session = N - 1

   Where:
   N = number of receivers deployed on the network. If only 2 receivers are used, then all the baselines will be independent.

7. **Loop requirements:** Loops made from GNSS baseline observations provide the mechanism for performing field data validation as well as a final adjustment accuracy analysis. Loops should be closed off within the maximum number of station intervals indicated in Table 4. Loops must not include trivial baselines.

Table 5 summarizes the criteria presented in the GNSS Horizontal Control Network design section.

Table 5: Minimum Standards for Horizontal Control Survey Design, Geometry, Connection, and Observing Criteria

Classification Order Criterion	2-cm Network Accuracy	2-cm Local Accuracy	5-cm Local Accuracy
General Criteria Required connections to existing SANSRS network	W/F/P	W/F/P	W/F/P
A baseline observation check is required over the existing control	W/F/P	W/F/P	No
Number of connections with the existing network (SANSRS or Local) Minimum	2	2	2
Optimum	3	3	3
Max distance from the network to the nearest point in the project	50 km for each		
Maximum distance to nearest CORS point	no specified limit		
Field Observing Criteria Repeat baseline occupations, not less than 10% or at least	2	2	2
Loop closure requirements: Maximum number of baselines/loops	20	20	20
Maximum loop length, km, not to exceed	200	N/R	N/R
Loop misclosure, ppm, not more than Spur baseline observations:	50	100	200
Number of sessions/baselines	2	2	2
Required antenna height measurement per session	2	2	2
Dual-frequency L1/L2 observations required: < 20-km lines	Yes	Yes	Yes

> 20-km lines	Yes	Yes	Yes
Recommended elevation mask above the horizon, degrees	15	15	15

Note: Abbreviations used in this table are explained as follows:

- W/F/P: Where feasible and practical
- N/R: No requirement for this guideline

2.2.5.2 Classical Control Network

The design of Control Survey traverses is primarily influenced by topographical features and structures such as hills, vegetation, roads, and buildings. In urban and fringe urban areas, traverses are typically confined to the street pattern, aiming to include not more than 5 intermediate stations between traverse junction points. In non-urban areas, traverse stations are likely to be within the road reservation, with sightlines crossing the open country alongside the road. The number of stations between junction points and the length of traverse legs varies based on road patterns and topographical details.

A point in the survey intended for intersection fixing, ideally should be fixed by four rays of equal length intersecting it at right angles, though achieving this ideal is often challenging in practice. In traverse design, the focus should be on creating sound, well-constructed geometric figures compatible with the expansion of the network into adjoining areas. Cross ties firmly braced into the geodetic network or into higher-order control networks, are deemed essential.

2.2.5.3 Horizontal Control Network

Several factors must be considered when choosing a site for a horizontal control traverse station (New South Wales, NSW, 1975):

- The instrument standpoints must be the permanent station marks.
- Intervisibility between stations must be maintained, considering the extension of the traverse into adjoining areas.
- The chosen position must ensure the mark's stability, avoiding disturbances or obscured sightlines. The permanence of all employed marks is crucial to integrated surveys, with considerations for services, utilities, road widening proposals, drainage areas, and potential erosion or surface changes.
- Adjoining traverse legs should be of nearly equal length.
- Lines of sight should clear all obstructions by at least one meter.
- The optimum length of sight for horizontal traverses is as follows:
    - Urban: The desirable length in urban and fringe urban areas is 500 meters.
    - Non-Urban: Traverse legs in non-urban areas should be about 1000 meters in length, not exceeding 1400 meters.
    - The desirable minimum length of sight is 200 meters.
- Each station site with traverse legs longer than 500 meters or in a position of doubtful permanency should have one witness mark within 50 meters of the main mark, intervisible with at least one adjoining main traverse station.
- Site selection is a compromise, considering all design aspects. Traverse design, planning, reconnaissance, and station site selection should be conducted by experienced survey personnel.

To determine the optimal spacing between survey marks, the geodetic coordinates of a control point bear a relation of specific accuracy to the coordinates of all other points in the horizontal control network (Federal Geographic Data Committee, FGDC, 1984). This relation is expressed as a distance accuracy, 1: a. Distance accuracy is the ratio of the relative positional error of a pair of control points to the horizontal separation of those points.

A distance accuracy, 1: a, is computed from a minimally constrained, correctly weighted, least squares adjustment by:

$$a = d/s$$

Where:

a is the distance accuracy denominator.

s is the propagated standard deviation of the distance between survey points obtained from the least squares adjustment

d is the distance between survey points

Then, the minimum distance accuracy varies based on the classification. For a third-order, class I survey network, the minimum distance accuracy 1: a is set at 1:10,000. For a third-order, class II survey network, the minimum distance accuracy 1: a is more stringent at 1:5,000. Finally,

$$d = a * s \text{ (where a is 5,000 or 10,000)}$$

2.2.5.4 Vertical Control Network

The elevation at a vertical control point bears a relation of specific accuracy to the elevations of all other points in the vertical control network (Federal Geographic Data Committee, FGDC, 1984).

That relation is expressed as an elevation difference accuracy, b. An elevation difference accuracy is the relative elevation error between a pair of control points that is scaled by the square root of their horizontal separation traced along existing level routes.

An elevation difference accuracy, b, is computed from a minimally constrained, correctly weighted, least squares adjustment by:

$$b = S/\sqrt{d}$$

Where:

d is the approximate horizontal distance in kilometers between control point positions traced along existing level routes.

S is the propagated standard deviation of elevation difference in millimeters between survey control points obtained from the least squares adjustment.

Note that the units of **b** are (mm)/ **√** (km).

Then, for a third-order vertical survey network, the maximum elevation difference accuracy **b** is 2. Finally,

$$d = (S/2)2$$

2.2.6 Location of Control Survey Point

The most important site selection parameters are the following (US Army Corps of Engineers, USACE, 2007):

1. **Security:** The security of survey control marks is of paramount importance, necessitating a careful evaluation of their susceptibility to damage or destruction. This involves anticipating any potential construction activities near the mark's location, such as future highways, waterways, or expanding structures.

Preservation efforts are particularly crucial given the significant investment involved in establishing and maintaining these marks.

2. **Floodplains:** To ensure the longevity of survey control marks, it is advisable to avoid locations in floodplains. Such areas are prone to sediment burial or erosion, which could compromise the visibility and stability of the marks over time.

3. **Accessibility:** The ease with which users can locate and occupy a survey control mark is a critical factor. Evaluating nearby objects that can serve as reference points and considering their permanence enhances the overall accessibility of the site.

4. **Stability:** The stability of the chosen site is multifaceted:

   - Topographic Features: Selecting sites on the crests of hills eliminates slope instability issues, providing a more stable foundation.
   - Soil Characteristics: Coarse-grained soils are preferred over fine-grained ones, as they offer better stability. Attention to soil grain size helps mitigate potential problems associated with soil movements.
   - Vegetation Impact: The presence of vegetation, particularly trees, can influence the stability of the upper soil layers. Careful consideration is required to balance the stabilizing effect of vegetation against potential drawbacks.
   - Geological Effects: Understanding the subsurface geological activity is crucial. Avoiding areas with unstable ground, such as caverns, mines, or areas prone to subsidence, contributes to the overall stability of the survey control mark.
   - Human-Made Structures: The stability of nearby structures should be assessed, and marks should be set considering the comparative stability of these structures.

5. **Corrosive Environment:** The corrosive character of the soil is influenced by factors such as aeration, water-soluble salts, and resistivity. Choosing appropriate materials, particularly corrosion-resistant options, becomes essential in corrosive soil conditions.

6. **Safety:** Safety considerations involve avoiding potential encounters with underground utilities during mark installation. Urban areas, in particular, require careful attention to prevent damage to utility lines. Additionally, it is essential to ensure the safety of surveyors who will use the survey control marks by carefully selecting sites that minimize any potential risks or hazards. This involves conducting thorough site assessments, considering factors such as terrain, accessibility, and environmental conditions to create a safe working environment for the surveyors.

7. **Satellite Visibility:** For GNSS surveying, the visibility of satellites is crucial. Selecting sites that provide maximum visibility above the horizon, minimizing potential obstructions, ensures reliable GNSS measurements.

8. **Inclusion in SANSRS:** Connecting survey control points to the SANSRS is essential for maintaining consistency and interoperability in surveying and geodetic data.

9. **Cost Comparison:** When planning monumentation, a cost-benefit analysis should be conducted. Comparing the expense of monument installation against potential repeated leveling costs helps make informed decisions, taking into account future uses and project requirements.

2.2.7 Monumentation of Control Survey Point

2.2.7.1 Horizontal Survey Mark Monumentation

A survey control mark should be (Intergovernmental Committee on Surveying and Mapping, ICSM, 2020):

- Made of good quality, durable, corrosion-resistant materials. It should employ robust construction techniques and be installed on stable ground or in solid rock (Figure 1 and Figure 2), such that it is least likely to be subject to local displacement or other seasonal or periodic movements. If a survey control

mark is to be installed in an unstable area, permanent marking may require placing deep-seated survey control marks (Figure 3) that penetrate the surface soil to the depth of refusal, thus bypassing the zone of seasonal or periodic influence.

- Permanently and clearly marked with a unique identifier to ensure unambiguous identification. A station identifier should be engraved or stamped on the survey control mark, or a durable tag with the identifier firmly attached. The identifier must include the name of the responsible organization and a unique number given by that organization. A marker post or indicator should be installed if a survey control mark will not be easy to find.

Note: All of the diagrammatic representations of survey control marks below are taken from the Intergovernmental Committee on Surveying and Mapping, ICSM, 2020.

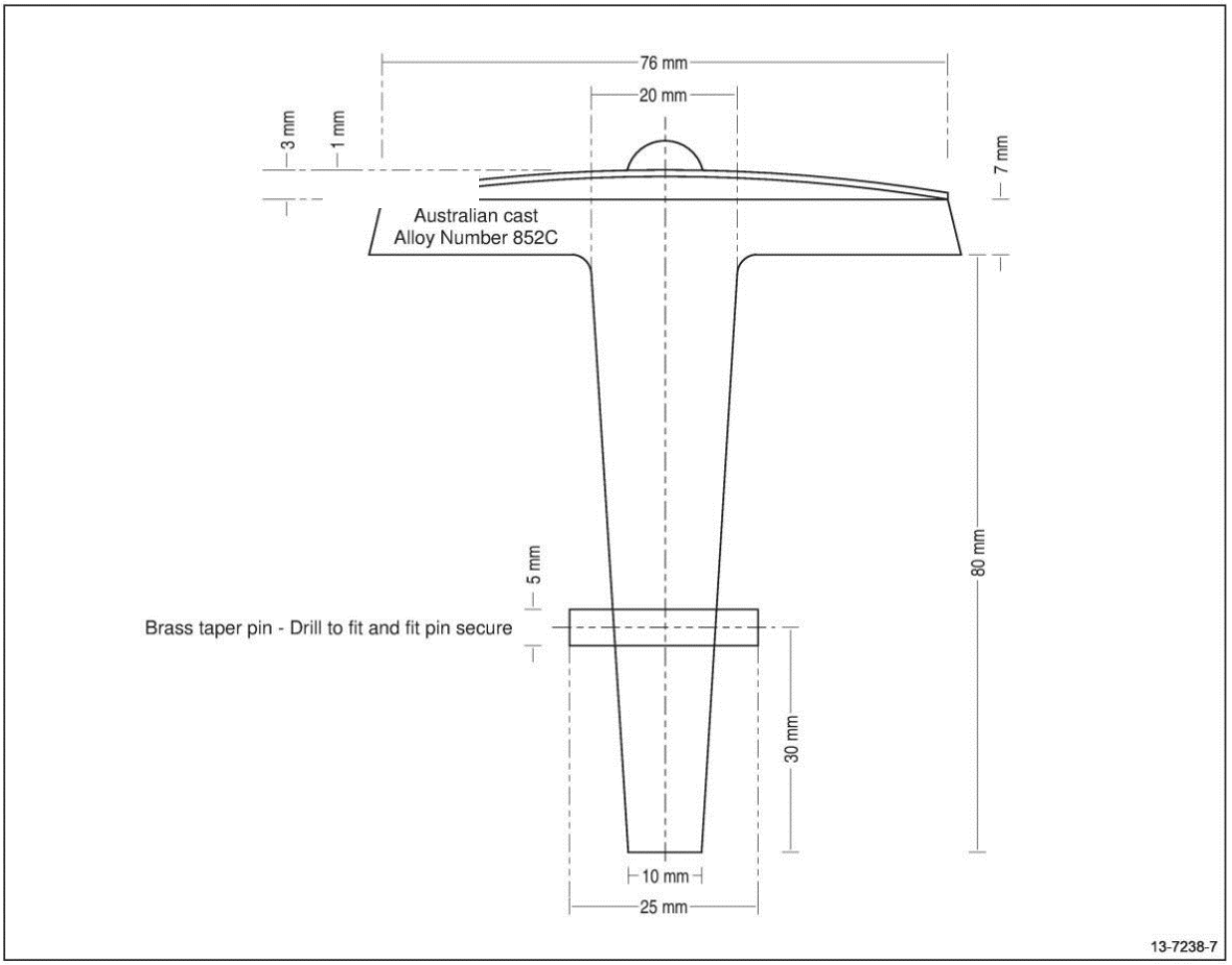

Figure 1: Survey Control Mark Brass Plaque Design Details

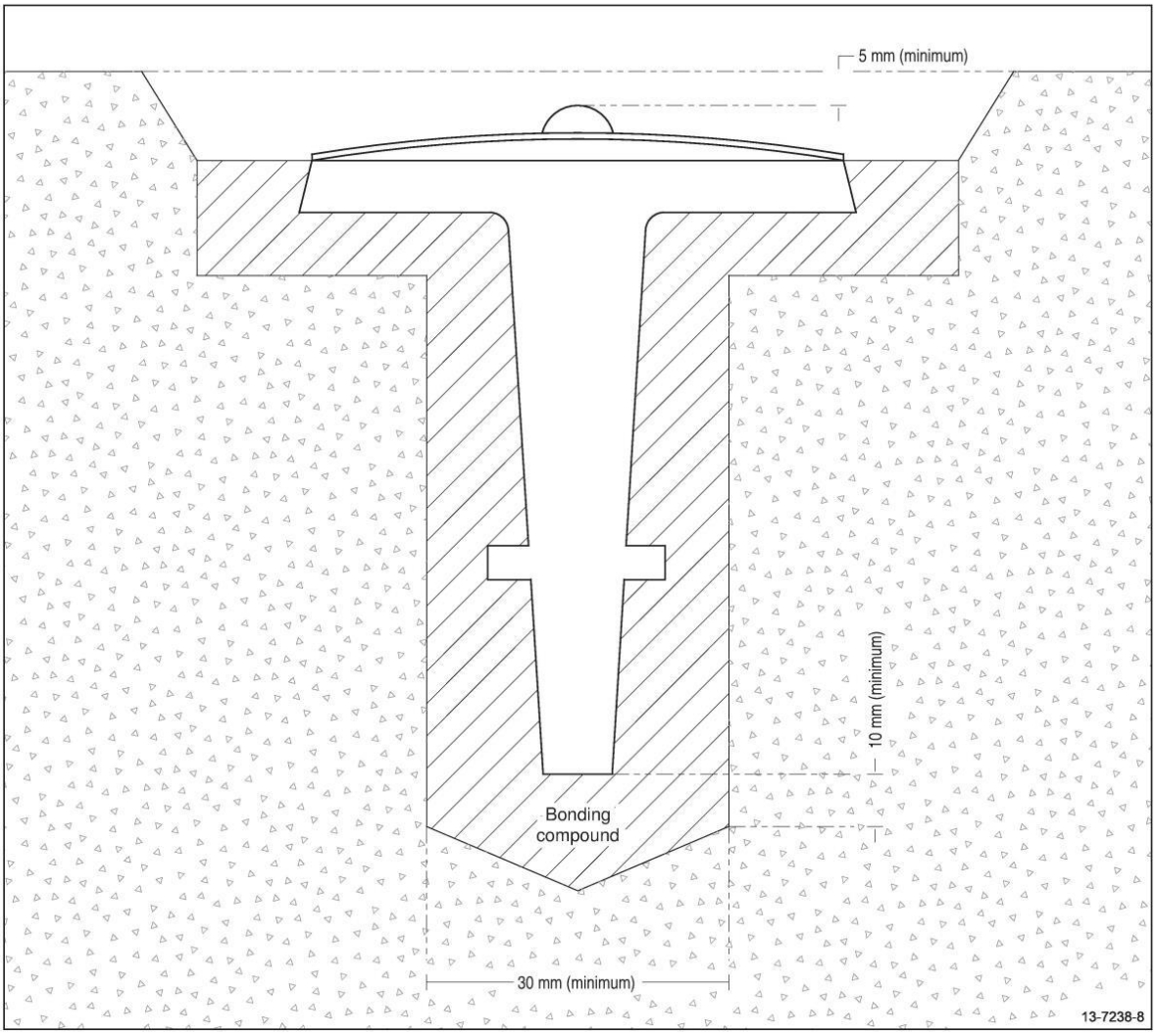

Figure 2: Survey Control Mark Brass Plaque Placement Details in Existing Curb or Rock

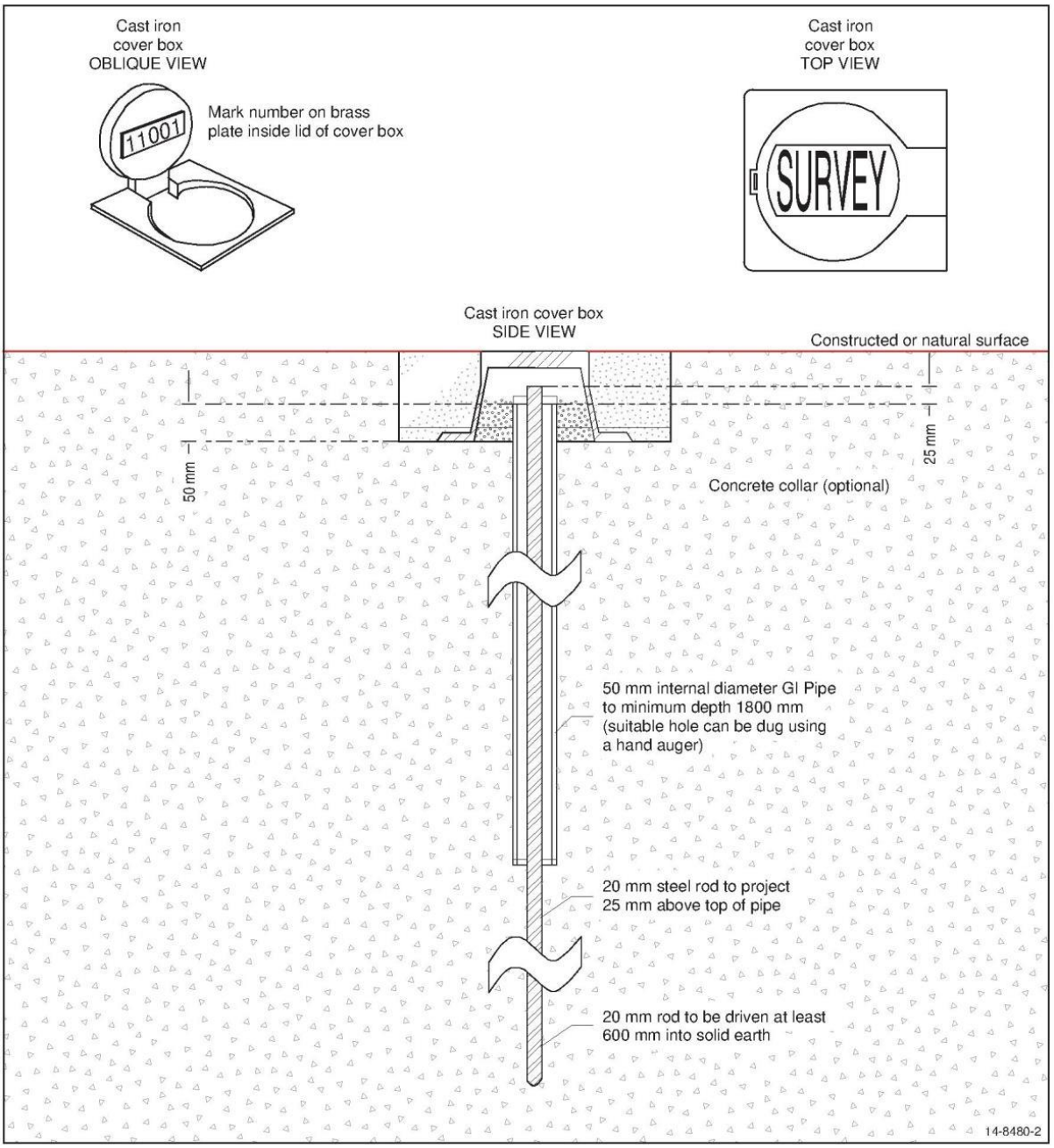

Figure 3: Deep Seated Permanent Survey Control Mark

2.2.7.2 Vertical Survey Mark Monumentation

Survey marks used to monument second-order leveling lines should be standard brass caps set in concrete. The concrete should be placed in holes deep enough to avoid local disturbance. If the brass cap is not attached to an iron pipe, use some type of metal to reinforce the concrete prior to embedding the brass cap. Concrete should be placed in a protected position. If possible, survey marks should be set close to a fence line, yet far enough away to permit plumbing of level rod. Do not set monuments closer than 1,2 meters to a fence post, as the benchmark will likely be disturbed if the post is replaced. Each brass cap must be stamped to identify it with the name of the responsible organization and a unique number. The survey marks must be set no less than 24 hours in advance of the level crew if the survey is to be made immediately after monument construction (US Army Corps of Engineers, USACE, 2012).

Third-order leveling lines should be tied to all existing survey marks along or adjacent to the line section being run. In the event there are no existing survey marks near the survey, new ones should be set, not more than 1 km apart. The steep landscape in the area of the survey may require monuments to be set at closer spacing.

Survey marks should be set on permanent structures, such as headwalls, bridge abutments, pipes, etc. Large spikes driven into the base of trees, telephone poles, and fence posts are acceptable for this level of work. All temporary survey marks must have a full description including location. Unless they are on a turn, they are not considered temporary survey marks. No closures shown by an intermediate shot will be accepted. All temporary survey marks must have a name or number for future identification (US Army Corps of Engineers, USACE, 2007).

2.2.8 Survey Records and Report

The purpose of maintaining comprehensive survey records is to ensure the accuracy, reliability, and traceability of survey measurements. These records serve as a permanent reference for future surveys and provide a basis for quality control and assurance.

- Responsibilities:
  - The Survey Manager or designated personnel are responsible for overseeing the creation, maintenance, and accessibility of survey records.
  - Surveyors are responsible for accurately documenting all survey activities, measurements, and observations in the field and office.
- Types of Records:
  - **Field Notes**: Detailed notes should be taken during field surveys, including the date, time, weather conditions, equipment used, and any deviations from the survey plan.
  - **Survey Data**: Raw data collected from instruments, including GNSS coordinates, angles, distances, and elevations.
  - **Sketches and Drawings**: Hand-drawn or digital sketches depicting the layout of the survey area, control points, and any relevant features.
  - **Photographs**: Photographs of the survey area, control points, and significant features.
  - **Reports**: Formal reports summarizing the survey results, methodology, and any deviations from the survey plan.
- **Retention Period:** Survey records should be retained for a minimum of 10 years after the completion of the project or as required by local regulations.
- **Access and Security:** Survey records should be stored in a secure location with restricted access to authorized personnel only. Digital records should be encrypted and backed up regularly.
- **Review and Approval:** All survey records should be reviewed and approved by the Survey Manager or designated personnel before being finalized and stored.
- **Documentation:** A comprehensive index or database should be maintained to track all survey records, including their location, format, and retention period.
- **Disposal:** Survey records should be disposed of in accordance with GEOSA policies and local regulations once the retention period has expired.
- **Training:** Surveyors should receive training on the importance of accurate record-keeping and the specific requirements for maintaining survey records.
- **Audits:** Periodic audits should be conducted to ensure compliance with record-keeping procedures and identify any areas for improvement.
- **Continuous Improvement:** Feedback from audits and project reviews should be used to update and improve survey record-keeping procedures.
- References: The survey records should reference any relevant standards, guidelines, or guidelines used in the survey process.
- **Appendices:** Include any forms, templates, or checklists used for documenting survey records.
- **Glossary:** Provide definitions for any technical terms or acronyms used in the survey records.

2.3 Engineering Surveys

2.3.1 Purpose

Engineering Surveys are a fundamental aspect of civil engineering and other related disciplines, providing essential data and information for the planning, design, construction, and maintenance of various engineering projects, on the surface and underground. The primary goals are to gather accurate and detailed information about the terrain, structures, and other relevant elements that can impact the engineering project and to accurately set out the positions of roads, rail, and structures from the engineering design plans for the construction thereof to take place.

Engineering Surveys are currently used for the following purposes:

- Road construction,
- Project studies,
- Construction, road and infrastructure development and management,
- Megaprojects,
- Looking to connect surveying technologies,
- Image corrections and locations,
- Land administration,
- Airports,
- Government property demarcation.

This section offers guidance on several essential considerations for conducting Engineering Surveys, encompassing Safe Work Practices, Entry to Land, Traffic Control, Accuracy Requirements, Surveys for Design, Setting out for Construction, Monitoring of Construction, Post-construction Survey, Deformation Survey, and Survey Records and Report.

2.3.2 Safe Work Practices

2.3.2.1 Responsibilities

Individuals:

- All field personnel shall have a practical working knowledge of this Guideline.
- Do everything reasonably necessary to protect life, safety, and the health of themselves, other employees, and the public.
- Comply with all occupational safety and health official policies, procedures, laws, rules, and regulations.
- Promptly report injuries, illness, accidents, and unsafe conditions, tools, and equipment to their supervisor or lead worker “in charge.”
- Report to work mentally and physically capable of performing all their assigned duties without jeopardizing the safety and health of themselves, other employees, or the public. This means employees must be free from the effects of medication, controlled substances, or the complications arising from illness or injury that might impair judgment or the ability to perform their work.

Supervisors or lead workers “in charge” are responsible for:

- Monitoring safety conditions and employee performance.
- Instructing employees about safety policies and practices affecting them.
- Prohibiting employees from working when they appear to be unable to perform their duties and there is concern about the safety of the employee or others.

- Designating a responsible person in charge when they are away from the workplace.

2.3.2.2 Planning for Safety

- Safety shall be given top priority in the planning of all surveys.
- Factors considered when planning a survey shall include:
  - The safest time of the day that the survey can be accomplished.
  - The optimum number of personnel to complete the survey safely.
  - The assignment of specially trained and qualified personnel to the more hazardous jobs.
  - Using surveying methods that minimize employee exposure to traffic.
- Personal Clothing Requirements
  - Each employee must provide and wear their own clothing and footwear that will provide adequate protection for the assigned task.
- Personal Protective Equipment
  - **Hard Hats:** State-issued hard hats must be worn while exposed to vehicular and equipment traffic, falling, or flying material, and other similar hazards, and shall also be worn when employees are within the right of way of a traveled road or on a construction site.
  - Warning Garments: Fluorescent Orange or yellow-green color vests, shirts, or other warning garments meeting ANSI/ISEA 107-2010 Class II or III Guidelines shall be worn when exposed to vehicular or equipment traffic and when working within the right of way of a traveled road or on a construction site. Never wear red within railroad right of way.
  - **Eye Protection:** Safety glasses, goggles, or face shields shall be worn when working near traffic using drilling and driving machines and tools, or encountering falling or airborne and windblown material, or other similar hazards.
  - **Ear Protection:** Ear plugs or muffs shall be worn when working around hazards affecting the ear or when noise levels may cause hearing loss. As a general rule, if you cannot carry on a conversation without shouting, the noise level requires hearing protection.
  - **Other:** Special safety equipment such as steel-toed boot covers, etc. shall be provided and shall be used as required or directed.

2.3.2.3 Safety Meetings

Tailgate meetings shall be held by each survey party at least once every ten working days. Meetings shall be held as required to prepare for imminent and especially potent hazards. Such hazards shall include, but not be limited to, power lines, poisonous plants, snakes, insects, animal hazards, mountainous terrain, high-fire-hazard areas, traffic, heavy equipment, water exposure, and high temperature.

2.3.2.4 Safety Training

Employees shall be provided with all mandatory safety training. Specialty training, such as chain saw operation, shall be provided as required.

2.3.2.5 Vehicular Traffic

Work, no matter how short the duration, must not be performed on or adjacent to the traveled way without proper protection. This includes proper warning garments, signs, flaggers, “lookouts,” and/or lane closures, as required to work safely.

2.3.2.6 Tools and Equipment

Use only the proper tool, in the proper condition, for each job. Do not operate equipment unless you have received training in its use.

2.3.2.7 First Aid Requirements

Each member of a field survey party or working group shall receive first aid training at least once every two years. Each survey party vehicle shall be equipped with an approved first aid kit, First Aid Manual, and fire extinguisher.

2.3.2.8 Vehicle Operation

All operators of Kingdom of Saudi Arabia-owned vehicles must be trained in defensive driver training once every four years (California Department of Transportation, CALTRANS, 2011). Each operator must drive defensively and observe all applicable traffic laws.

2.3.3 Entry to Land

Access to land beyond the road corridor is often necessary to facilitate survey activities.

2.3.3.1 Private Land

Prior to conducting any surveying activities on private property, written permission must be obtained from the property owner(s). This permission shall be documented through official forms signed by each landowner granting access to their property for surveying purposes. The approved regulations of the Kingdom of Saudi Arabia pertaining to land measurement rights shall be explicitly referenced and included in the forms to ensure clarity regarding the scope of permitted activities.

2.3.3.2 Entry Refusals

In the event of a property owner's refusal to grant entry or withdrawal of previously provided permission, surveying staff must adhere to the decision and promptly inform the client or relevant survey authority. The surveyor in charge is responsible for initiating negotiations with the property owner to secure or re-secure entry rights. If permission continues to be denied, legal recourse may be pursued.

2.3.3.3 Public enquiries

During the course of the survey, inquiries from property owners or the public regarding the purpose of the survey, proposed works, compensation assessment methods, and other related matters may arise. In such instances, individuals making inquiries should be directed to the Project Manager or any designated personnel specified in the survey brief, who are tasked with addressing such queries.

2.3.4 Traffic Control

Working in, near, and around traffic is an inevitable part of surveying work. Field crews need to take the following precautions to ensure the work is performed as safely as possible.

2.3.4.1 General Procedures

Use the following general safety procedures when working in or around traffic (California Department of Transportation, CALTRANS, 2011):

- **Required "Free Space":** Maintain at least 2 meters of space between moving traffic and your work area. This includes work on the shoulders as well as on the traveled way. Survey at the maximum space possible between moving traffic and your work area. Any surveying that requires working within 2 meters of moving traffic must be approved by the Field Supervisor or the Surveys Manager.
- **Face Traffic:** Whenever feasible, each employee must face moving traffic at all times. If it is not possible to face traffic, a lookout should be used.

- **Move Deliberately:** Do not make sudden movements that might confuse a motorist and cause an accident.
- **Signal Cautiously:** Whenever feasible, use radio communication. Carefully and deliberately use surveying hand signals so they will not startle or confuse motorists or be mistaken for a flagger's direction.
- **Avoid Interrupting Traffic Flow:** Minimize crossing traffic lanes and never attempt to run across traffic lanes.
- **Physical Barriers:** Whenever feasible, place a barrier vehicle or a shadow vehicle between moving traffic and workers.

2.3.4.2 Lookouts

While working on foot on or near the traveled way, workers should normally be protected by barrier vehicles, guardrails, or other physical means. Where the absence of such physical protection exposes workers on foot to errant vehicles, a person shall be assigned as a lookout.

A lookout is an employee whose only duty is to provide immediate warning to coworkers of vehicles or equipment that have become imminent hazards to their safety. The lookout shall not try in any way to direct traffic. A lookout is used only to warn of impending traffic hazards, not direct or control them.

Lookouts are required when all of the following conditions exist (California Department of Transportation, CALTRANS, 2011):

- Work occurs on a roadway with a posted speed of 100 km/h or more.
- Workers are without physical protection (barrier vehicle, k-rail, natural or man-made terrain features, etc.).
- Working on foot within 10 meters of moving traffic.

Lookouts should be considered whenever:

- Working without traffic controls on streets and highways.
- Working within 7.5 meters of the centerline of an actively used railroad track outside of a railroad right of way.
- Where there are conflicting or multiple vehicular and equipment movements.
- In areas with restricted sight distances.

Lookouts must be in constant communication with the employee under their protection. If restricted sight distance or other factors preclude verbal communication, use a radio. Lookouts should be stationed where they can observe traffic sufficiently in advance of the workers to warn them of approaching danger from out-of-control vehicles. Use audible warning devices such as horns or whistles. In some cases, more than one lookout may be necessary. When it appears that a vehicle or some equipment has become a threat to personnel, the lookout will immediately and repeatedly use the word "scramble," or activate a warning device.

2.3.4.3 Flaggers

A flagger is a trained person who gives motorists, pedestrians, and cyclists exact instructions, enabling them to move through temporary traffic control zones safely. Flaggers should be carefully chosen because they are responsible for public safety and make the greatest number of public contacts of all highway workers. Because of their importance and responsibility, flaggers should be rotated and relieved periodically to maintain alertness (California Department of Transportation, CALTRANS, 2011).

Flaggers must be used any time two-way traffic must share the same lane because of work in the other lane. Generally, flaggers should not be used along freeways.

Flaggers shall be trained in flagging procedures and use the proper equipment and safety garments.

2.3.4.4 Protective Vehicles

Protective vehicles can be especially important at sites, such as instrument set-ups, where surveyors might be located for an extended period of time. There are two types of protective vehicles (California Department of Transportation, CALTRANS, 2011):

- **Barrier Vehicle:** A vehicle, usually unoccupied, which is parked between the oncoming traffic and a stationary work site.
- **Shadow Vehicle:** A vehicle with an attenuator that follows a survey operation moving in the direction of traffic.

Position protective vehicles so they are effective barriers to the traffic. Keep a protective vehicle close enough to employees to give actual physical protection but not so close that it is a hazard to employees. To determine the appropriate spacing between protective vehicles and personnel, see Table 6 which provides data on "roll-ahead" for protective vehicles of various weights.

Table 6: Shadow Vehicle Roll Ahead After Impact

Impacting Vehicle		**Shadow Vehicle (SV)**		**Speed of SV after Impact**	**Roll Ahead of SV**
Weight (kg)	Speed (km/h)	Weight (kg)	Speed (km/h)	(km/h)	(meter)
1,000	100	2,700	0	24	5
		4,500	0	16	2
		10,900	0	8	1
		2,700	40	53	52
		4,500	40	48	16
		10,900	40	45	12
2,000	100	2,700	0	39	14
		4,500	0	27	6
		10,900	0	14	1
		2,700	40	61	37
		4,500	40	55	25
		10,900	40	48	15
4,500	100	2,700	0	55	46
		4,500	0	45	22
		10,900	0	26	5
		2,700	40	71	74
		4,500	40	64	46
		10,900	40	55	23
10,900	100	2,700	0	71	141
		4,500	0	63	74
		10,900	0	43	22
		2,700	40	79	174

Impacting Vehicle		Shadow Vehicle (SV)		Speed of SV after Impact	Roll Ahead of SV
		4,500	40	74	105
		10,900	40	64	46

2.3.4.5 Amber Warning Lights and Emergency Flashers

Use amber warning lights, emergency flashers, or both as needed (California Department of Transportation, CALTRANS, 2011):

- To alert traffic of workers on foot or operations near the traveled way.
- When moving into or out of traffic.
- When parked outside of a lane closure within 2 meters of traffic.

Do not use the amber lights when driving at normal highway speeds, when parked in an established lane closure, or when parked over 2 meters from traffic, unless circumstances warrant usage. Misuse and overuse of warning lights seriously reduce their effectiveness. When working during the hours of darkness, use the amber lights with discretion. Do not blind or distract traffic needlessly. At times, the vehicle's emergency flashers may be more effective.

2.3.4.6 Temporary Traffic Control

Temporary traffic controls are used to establish a "working area-of-protection" for employees. Methods of temporary traffic control include the use of (California Department of Transportation, CALTRANS, 2011):

- Portable warning/control devices,
- Prescribed procedures (*see below*), and
- Personnel such as flaggers and lookouts.

Traffic movement should be disrupted as little as possible by traffic controls. Optimum safety can be achieved most effectively through controlling the activities of surveyors rather than restricting vehicular movements.

Procedures

- Do not undertake any form of temporary traffic control without consulting and following official directives.
- Lane closures should only be undertaken with the approval of the official Traffic Manager.
- Set-up and removal of lane and shoulder closures should generally be undertaken by Maintenance using official guidelines.
- The protection of employees and the public shall be the primary consideration when temporary traffic control measures are used.
- All reasonable measures shall be used to avoid interference with vehicular movement. Lane and shoulder closures shall not be considered until other alternatives have been evaluated for employee protection.
- Minimize the time that temporary control devices are used. Employee breaks should be scheduled so that temporary control devices are utilized for the entire period they are in place.
- The party chief is responsible for inspecting and monitoring traffic controls set by surveyors or others. If controls are inadequate or conditions change, surveying activities shall be halted until a safe condition is established.

- Except for special surveys or because of a lack of reasonable daylight alternatives, surveys on or adjacent to roads shall be done only during full daylight hours.
- In general, limit the length of a work area to 1 km. When the scope of the survey is longer than 1 km, divide the survey into lengths of 1 km or less. When using lane or shoulder closures, limit the total closure length to an area that can be surveyed during an uninterrupted period of work.

Planning

When planning a surveying project that requires temporary traffic controls, be sure to:

- Use standard traffic control layouts.
- Use surveying methods that minimize exposure to traffic hazards.
- Consider factors that will affect traffic hazards and implement temporary traffic controls to minimize the hazards. Some factors to consider are:
    - Prevailing traffic speed.
    - Peak traffic hours.
    - Motorists' sight distances.
    - Effect of unusual survey activities on traffic.
    - Pavement conditions – wet, frosty, etc.
    - Special conditions and events, such as school hours and large public gatherings.

2.3.4.7 Yellow-Stripe Surveys

The term "yellow stripe'' survey is used to designate those surveys along the centerlines, or lane stripes, of conventional roads. A yellow-stripe survey without a lane closure must be approved by the Field Supervisor or Surveys Manager. A yellow-stripe survey with a lane closure must be recommended by the Field Supervisor and approved by the Surveys Manager after consultation with the official Traffic Manager (California Department of Transportation, CALTRANS, 2011).

Yellow-stripe surveys should only be undertaken after considering and rejecting all alternatives, including remote sensing. Yellow-stripe surveys must be performed during off-peak hours.

2.3.5 Connection to National Geodetic Network

All engineering surveys must be connected to the National Geodetic Network of the Kingdom of Saudi Arabia. The National Geodetic Network is defined by the Saudi Arabia National Spatial Reference System (SANSRS). Refer to the Guidelines for Geodesy for the Kingdom of Saudi Arabia ()

All coordinates are to be given in the Universal Transverse Mercator (UTM) Projection as Eastings and Northings in the relevant UTM Zone (36N, 37N, 38N, 39N, and 40N).

All measurements must be given in the SI system of units, with distances given in meters.

Control points must be established and surveyed in accordance with the guideline for Control Surveys (see .). The control points must be located in positions, as required by the specific project, to facilitate pre-construction and post-construction surveys, or for the accurate monitoring of structures or parts thereof.

2.3.6 Accuracy Requirements

The quality of an Engineering Survey shall be quantified in terms of accuracy in order to be consistent with the ISO definition (Joint Committee for Guides in Meteorology, JCGM, 2020).

Local Accuracy is the accuracy of the horizontal and/or vertical coordinates of a survey control mark relative to the survey in which it was observed and is free from the influence of any imprecision or inaccuracy in the underlying datum realization. Therefore, local accuracy reflects only the accuracy resulting from survey measurements, measurement precisions, network geometry, and the choice of constraint (Federal Geographic Data Committee, FGDC, 1998).
A least squares adjustment is the most rigorous way to estimate and test the accuracy. For local accuracy, a minimally constrained adjustment should be used.

Annex A of Guidelines for Geodesy for the Kingdom of Saudi Arabia () provides the methodology for defining local accuracy as well as a worked example of how to compute accuracy from previous definitions based on Class and Order.

2.3.6.1 Expression of Accuracy

Local accuracy shall be expressed in terms of the 95% confidence level using any one of the following methods (Intergovernmental Committee on Surveying and Mapping, ICSM, 2020):

- Standard deviations,
- Standard error ellipse/ellipsoid; or
- Horizontal circular confidence region.

To express standard deviations for one-dimensional components at the 95% confidence level, the uncertainty value is simply computed by scaling the estimated (1 sigma) standard deviation by coverage factor k = 1.960.

To express the (two dimensional) standard error ellipse at the 95% confidence level, the axes of the 95% error ellipse are obtained by scaling the (1 sigma) axes by coverage factor k = 2.448.

Similarly, the axes of the (three-dimensional) 95% error ellipsoid are obtained by scaling the (1 sigma) axes by coverage factor k = 2.796.

For the horizontal circular confidence region, the 95% uncertainty value is calculated from the standard (1 sigma) error ellipse and is expressed as a single quantity, being the radius of the circular confidence region. The radius (*r*) of the circular confidence region is computed by:

$$r = a * K$$
$$K = q_0 + q_1 C + q_2 C^2 + q_3 C^3$$
$$C = b / a$$

Where:

a = semi-major axis of the standard error ellipse
b = semi-minor axis of the standard error ellipse
q_0 = 1.960790
q_1 = 0.004071
q_2 = 0.114276
q_3 = 0.371625

Values for *a* and *b* shall be derived from the full *a-posteriori* variance matrix obtained from the least squares adjustment.

2.3.6.2 Survey Accuracy Bands

The survey detail accuracy band is shown in Table 7 shall be used to define what accuracies are to be achieved for different surveyed features independent of plot scale. All accuracies quoted within the accuracy band table

are taken as the accuracy of individual survey points relative to the survey control points (Royal Institution of Chartered Surveyors, RICS, 2014).

Table 7: Survey Detail Accuracy Band Table

Plan Accuracy (X, Y)		Height Accuracy (Z)			Example Survey Types/ Uses	Approximate legacy plot scale output required to achieve accuracy band
Band	**Acc. (mm)**	**Band**	**Acc. hard detail (mm)**	**Acc. soft detail (mm)**		
A	4	A	2	N/A	Monitoring, high accuracy engineering setting out and fabrication surveys	1:5
B	8	B	4	N/A	Monitoring, high accuracy engineering and measured building surveys and setting out	1:10
C	10	C	5	N/A	Engineering surveying and setting out, high accuracy measured building surveying, heritage recording	1:20
D	20	D	10	25	Engineering surveying and setting out, measured building surveys, high accuracy topographic surveys, determined boundaries, area registration	1:50
E	50	E	10	50	Measured building surveys, topographic surveys, low accuracy setting out, net area surveys, valuation surveys, area registration, utility verification (QL-A) PAS 128 (UK)	1:100

2.3.7 Pre-construction Survey

A pre-construction survey, or survey for design, is conducted to collect geospatial data necessary for the planning and design of engineering projects. Such surveys may be undertaken in two stages, with the first stage providing sufficient detail for the initial planning, such as the route selection for a highway, which is then followed by a more detailed survey required for the final design work to be done for the construction project.

2.3.7.1 Survey Planning and Preparation

- Prior to conducting surveys, define the objectives, scope, and accuracy requirements based on project Guidelines.
- Identify control points and establish their SANSRS coordinates.
- Develop a survey plan outlining survey method, equipment, field procedures, and data processing techniques.
- Ensure survey equipment is calibrated and maintained in accordance with manufacturer Guidelines.

2.3.7.2 Field Survey Procedures

- Conduct field surveys following the established plan, adhering to safety protocols and environmental regulations.
- Use appropriate survey methods such as total stations and GNSS based on project requirements.

Collect geospatial data with sufficient density and accuracy to represent the project area and features adequately. Refer to Section 2.4.4 for the feature list and class to be used. Implement quality control measures to verify the accuracy and reliability of survey measurements.

2.3.7.3 Data Processing and Analysis

- Process survey data using industry-standard software, ensuring proper adjustment, transformation, and validation procedures.
- Perform error analysis to assess the quality and reliability of survey results.
- Validate survey data against project guidelines and accuracy requirements.

2.3.8 Construction Survey

2.3.8.1 Setting-Out for Construction

When undertaking an engineering or construction project, it is imperative to accurately translate the planned design onto the actual ground, ensuring precise alignment, absolute positioning, and correct dimensions. To achieve this, surveys conducted for a particular project must be meticulously planned, keeping the setting-out process in focus. Establishing a strategically positioned system of three-dimensional control stations, with sufficient coverage, is essential to streamline and optimize the setting-out procedure, promoting efficiency and cost-effectiveness.

2.3.8.1.1 Responsibility of the Setting-Out Surveyor

The setting-out surveyor is responsible for establishing an effective on-site system that guarantees accurate setting out of the works well before the construction commencement. To accomplish this, the following factors must be taken into consideration (Schofield and Breach, 2007):

- **Comprehensive Understanding:** Gain a thorough comprehension of the plans, working drawings, setting-out data, tolerances, and the project's timescale. Implement immediate checks on the provided setting-out data.
- **Site Knowledge:** Acquire extensive knowledge of the site, equipment, and relevant personnel. Effective communication among all team members is crucial. Conduct field checks on the survey control already set up on-site, potentially by contracted surveyors, at the earliest opportunity.
- **Instrumentation Expertise:** Develop a profound understanding of the survey instrumentation available on-site, including the impact of instrumental errors on setting-out observations. Establish a base for the calibration of tapes, Electronic Distance Measurement (EDM) equipment, levels, and theodolites at the earliest opportunity.
- **Stores Management:** Acquire a comprehensive knowledge of available stores to ensure a continuous supply of necessary materials such as pegs, pins, chalk, string, paint, timber, etc.
- **Organized Office Procedures:** Organize office procedures for easy access to all essential information. Store plans flat in plan drawers and withdraws amended or superseded plans from use and store them separately. Reference and file fields and level books meticulously. Clearly present, reference, and file all setting-out computations and procedures.
- **Independent Checks:** Conduct independent checks wherever possible, including the computation, abstraction, and extrapolation of setting-out data, as well as the actual setting-out procedures. This ensures an additional layer of verification to enhance accuracy and reliability.

2.3.8.1.2 Setting-Out Procedures Using Coordinates

- **By Polar Coordinates**

In Figure 4, *A*, *B,* and *C* are control stations whose coordinates are known. It is required to locate point *IP* whose design coordinates are also known. The computation involved is as follows (Schofield and Breach, 2007):

1. From coordinates compute the bearing *BA* (this bearing may already be known from the initial control survey computations).
2. From coordinates compute the horizontal length and bearing of *B − IP*.
3. From the two bearings compute the setting-out angle *AB*(*IP*), i.e., *β*.
4. Before proceeding into the field, draw a neat sketch of the situation showing all the setting-out data. Check the data from the plan or by independent computation.

Alternatively, the coordinate geometry functions in a total station can be used to avoid most of the computations. The fieldwork involved is as follows:

1. Set up theodolite at *B* and backsight to *A*, note the horizontal circle reading.
2. Add the angle *β* to the circle reading *BA* to obtain the circle reading *B − IP*. Set this reading on the theodolite to establish direction *B − IP* and measure out the horizontal distance *L*.

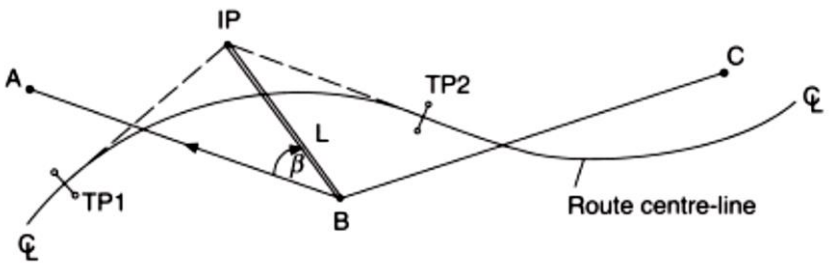

Figure 4: Setting Out from Control Points.

- **By Intersection**

This technique, illustrated in Figure 5, does not require linear measurement; hence, adverse ground conditions are immaterial, and one does not have to consider tape corrections. The technique is applicable if a total station is not available or if its batteries are flat. The computation involved is as follows (Schofield and Breach, 2007):

1. From the coordinates of *A*, *B,* and *IP* compute the bearings *AB*, *A − IP,* and *B − IP*.
2. From the bearings compute the angles *α* and *β*.

The relevant fieldwork, assuming two theodolites are available, is as follows:

Set up theodolite at *A*, backsight to *B,* and turn off the angle *α*.

Set up theodolite at *B*, backsight to *A,* and turn off the angle *β*.

The intersection of the sight lines *A−IP* and *B−IP* locates the position of *IP*. The angle *δ* is measured as a check on the setting out.

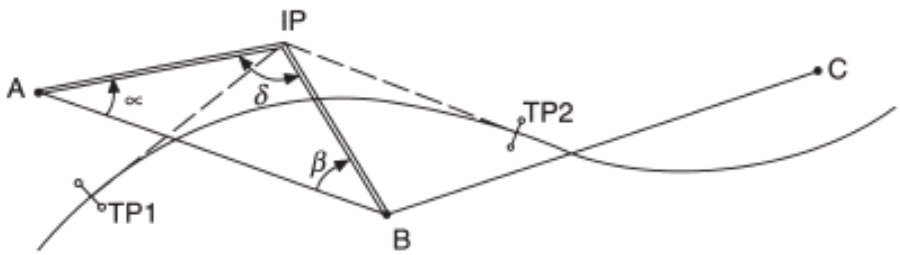

Figure 5: Setting Out by Intersection.

2.3.8.1.3 General Concepts of Staking in Road Projects

In road projects, staking is crucial for ensuring accurate construction alignment. Four staking methods are typically employed (Committee of Transport Officials, 2017):

- Normal center line staking without referencing.
- Normal center line staking with referencing.
- Offset staking without referencing; and
- Offset staking with referencing.

Before initiating the survey, the Surveyor should ascertain the specific staking method required for the project. This ensures that the staking aligns with the project's design and construction needs.

- The staking interval: Unless otherwise specified in the project, the standard staking interval is 20m and 10m in the case of curves with radii of less than 200m.
- Stake value: The stake value of any point shall be recorded in meters and to three decimals of a meter, e.g., 1276.320.
- Checking: A final coordinate list of all points and reference points must be submitted reflecting the differences between the staked coordinate and the coordinate supplied for staking.

2.3.8.1.4 Staking in Road Projects

Setting Out of Road Alignment Key Points and Road Alignment Intermediate Points.

The Key Points, e.g., Beginning of Curve (BC), End of Curve (EC), Beginning of Transition Curve (BTC), Beginning of Circular Curve (BCC), etc., and Intermediate Key Points at every even 200m along straights, e.g., 12,200 and 12,400, etc. and on curves every 100m, e.g., 14,100 and 14,200, etc., must be set out from existing Permanent Survey Control beacons. Intermediate Key Points less than 5m from a key point need not be placed or referenced. In the case of curves of less than 200m radius, the position nearest to the center of the curve must be an intermediate key point (Committee of Transport Officials, 2017).

The center line intermediate points (20m interval points) required for cross- and longitudinal sections shall be set out from Key Points, Intermediate Key Points, or Permanent Survey Control beacons.

All staked key and Intermediate Key Points shall be recorded for positional checks after the peg has been established in the field. A comparison between the supplied and placed coordinates shall be made and submitted with the final data.

- **Peg sizes for Key Points:** Steel pegs of a minimum diameter of 10mm and of 300mm in length shall be used for all Key Points.
- **Concreting of Key Points:** Pegs for Key Points shall be placed in a concrete casting (minimum depth of 200mm below the ground). The concrete casting must be of a minimum diameter of 200mm and must

be molded so that the peg protrudes not more than 5mm above the surface of the concrete (unless otherwise specified). Key Points must not be used until the concrete has been set properly.

- **Marking of Key Points:** Key Points shall be marked by a cairn of stones of at least 0.3m height and coated with a durable white lime product.

Intermediate points must be suitably marked to facilitate the measuring and heighting of the cross-sections. Unless specified, pegs are not required to be placed.

2.3.8.1.5 Heighting of Key and Intermediate Points

- All staked key and Intermediate Key Points and their reference points (if placed) shall be accurately levelled, and their full stake values recorded in meters.
- All Key Points shall be leveled with a differential digital or spirit level.
- Forward and reverse leveling must not be carried out simultaneously with the same instrument, even if two different staves are used.
- The intermediate points need not be accurately levelled but may be determined by tachometric or GNSS methods, provided that proof that the geoid was properly modeled and that the GNSS base length was restricted to 1000m as supplied. The existing Permanent Survey Control levels must be used to model the geoid.
- Height differences greater than 50mm between the top of the peg and actual ground level must be recorded and noted in the technical report.

2.3.8.1.6 Offset Staking

- Offset staking may be permitted depending on the project.
- The offset stake values must be calculated to be perpendicular to the center line. All Key Points staked at an offset shall indicate the distance and direction from the center line (e.g., 2200/5m R) on the peg.

2.3.8.1.7 Staking with Referencing

- Reference Pegs -
  - As a general rule, reference pegs must be placed at 15m or 20m on either side of the center line (depending on the width of the Road Reserve) and perpendicular to the center line (i.e., at 90° to the tangent at the center line). Reference pegs must be placed where they are least likely to be disturbed.
  - The Surveyor must liaise with the Client so as to ensure that reference pegs are placed so as to be clear of any future earthworks.
- Referencing Requirements -
  - Straights- multiples of 200 meters.
  - Curves- Begin Curves (BCs), Begin Transitional Curves (BTCs), End Curves (ECs), End Transitional Curves (ETCs) and multiples of 100 meters.
  - Short curves under 200m in length- BCs, ECs, etc. as well as the peg nearest to the center of the curve which shall be an intermediate key point.

2.3.8.2 Monitoring of Construction Survey

The monitoring of construction surveys aims to ensure that construction activities are conducted in accordance with approved plans, guidelines, and regulatory requirements, while also detecting and addressing any deviations or discrepancies in real-time to mitigate potential risks and ensure project success.

The monitoring process shall encompass all phases of construction, including site preparation, earthworks, foundation construction, structural erection, infrastructure installation, and finishing works, as applicable to the project scope and nature.

2.3.8.2.1 Features to Monitor

The following features are to be monitored (Royal Institution of Chartered Surveyors, RICS, 2014):

- Buildings,
- Earthworks,
- Walls (including retaining walls),
- Industrial/ mechanical structures,
- Railways,
- Roads,
- Bridges,
- Tunnels/subways,
- Pipework.

2.3.8.2.2 Parameters to Monitor

Monitoring shall cover various parameters relevant to construction quality, safety, environmental compliance, and schedule adherence. These parameters may include but are not limited to (Royal Institution of Chartered Surveyors, RICS, 2014):

- Compliance with approved construction drawings, designs, and guidelines.
- Accuracy of layout and setting out of structural elements, utilities, and infrastructure.
- Quality of materials used, workmanship standards, and construction techniques.
- Compliance with safety regulations, including the implementation of proper safety measures and protocols.
- Environmental impact assessment and mitigation measures.
- Progress against the project schedule and milestones.

2.3.8.2.3 Frequency and Duration

Monitoring activities shall be conducted regularly and systematically throughout the construction timeline, with the frequency and duration determined based on the project's complexity, criticality, and risk factors. Continuous monitoring may be required during critical construction phases, while periodic inspections may suffice for less critical activities. The monitoring survey is to be repeated at the frequency stated below according to the project guidelines ():

- Constant monitoring,
- Hourly,
- Daily,
- Weekly,
- Monthly,

- Quarterly/ seasonally, or
- Annually.

2.3.8.2.4 Monitoring Point Monumentation

Monitoring point monumentation is used to establish clearly identifiable reference points for precise monitoring of construction activities and structural changes over time. The following monumentation methods shall be employed to mark monitoring points (Royal Institution of Chartered Surveyors, RICS, 2014):

- Spray paint mark,
- Peg,
- Peg with a nail,
- Ground anchor,
- Survey nail,
- Reflective/retro target,
- Survey prism,
- GNSS receiver,
- Tiltmeter,
- Crack gauge.

2.3.8.2.5 Monitoring Technique

A combination of manual inspections, field surveys, remote sensing technologies, and automated monitoring systems may be employed to gather data and assess construction performance.

2.3.8.2.6 Data Collection and Analysis

Data collected during monitoring activities shall be systematically recorded, documented, and analyzed to identify trends, deviations, and potential issues. Real-time data analysis tools and software may be utilized to provide immediate feedback to project stakeholders and facilitate timely decision-making.

2.3.8.2.7 Reporting and Communication

Comprehensive monitoring reports shall be prepared and submitted regularly to project stakeholders, including owners, contractors, engineers, and regulatory authorities. Reports shall include detailed observations, findings, recommendations, and corrective actions taken, if any.

2.3.8.2.8 Quality Assurance and Compliance

The monitoring process shall adhere to established quality assurance protocols and standards to ensure the accuracy, reliability, and integrity of monitoring data. All monitoring activities shall comply with relevant industry standards, codes of practice, and regulatory requirements.

2.3.8.2.9 Risk Management

Proactive risk management measures shall be integrated into the monitoring process to identify potential construction-related risks and hazards promptly. Mitigation strategies shall be developed and implemented to minimize the impact of identified risks on project outcomes.

2.3.8.3 Post-construction Survey (As-Built Survey)

Post-construction, or As-built surveys, are surveys compiled to show the actual condition of completed projects as they exist for record purposes and/or payment. Since many field changes occur during construction, both authorized and clandestine, surveys are regularly completed to check the project against plans and guidelines. As-built surveys are usually a modified version of the site plans that were originally required to plan the project. This is particularly true of road, railroad, or watercourse relocation projects. These projects are all of the route survey nature. The as-built survey, out of necessity, is this type also. Typical items checked are:

- Alignment.
- Profile or grade.
- Location of drainage structures.
- Correct dimensions of structures.
- Orientation of features.
- Earthwork quantities (occasionally).

2.3.8.3.1 Procedures

As-built surveys should include the following procedures:

- Scope and Planning:
  - Conduct an initial assessment of the survey and site plans to identify the features required for location during the survey.
  - Gather land surveying documentation, including blueprints and as-planned documents, and meet with engineers, architects, contractors, and other stakeholders to clarify any project details or requirements.
- On-Site Work:
  - Perform a site survey to connect to any previous survey control and locate as-built features.
  - Measure all surfaces using manual or digital tools and document the existing condition of the site, including environmental risks, utility locations, installations, and water quality assessments.
- Data Intake:
  - Utilize software to process survey data, including measurements and material information, and address any discrepancies or gaps by consulting stakeholders or site personnel.
- Drafting:
  - Compile the survey data to draft the actual as-built survey report, ensuring it accurately reflects the project or site conditions and includes all relevant changes that occurred during construction.
- Review:
  - Conduct an internal review of the as-built survey report by surveyors to verify accuracy and completeness.
  - Engage select team members from the project site to review the report and provide feedback on its accuracy and clarity.
- Delivery:
  - Finalize the as-built survey report based on the feedback received during the review process.
  - Deliver the completed as-built survey report to the relevant stakeholders, including engineers, architects, contractors, and regulatory authorities, for their records and future reference.
- Documentation:

  - Prepare an As-Built Survey Plan in the format required by council or construction standards, documenting all survey procedures, findings, and conclusions in a comprehensive and organized manner.
  - Ensure that the survey data is tied to the designated KSA-GRF and KSA-VRF datums unless explicitly stated otherwise in the respective contracts or agreements.
- Quality Assurance:
  - Implement quality assurance measures throughout the survey process to maintain data accuracy, integrity, and reliability.
  - Conduct periodic audits and checks to ensure compliance with surveying standards, regulatory requirements, and project guidelines.
- Record Keeping:
  - Maintain detailed records of the survey activities, including field notes, measurements, photographs, and any communication with stakeholders, for future reference and auditing purposes.

2.3.8.3.2 Route Projects

For route-survey-type projects, a traverse is usually run, and major features of the curve alignment are checked. Profiles may be run with particular attention paid to sags on paved roads or other areas where exact grades are critical. Major features of road projects that are often changed in the field and will require close attention are drainage structures. It is not uncommon for quickly changing streams to require modification of culvert design. Therefore, culvert and pipe checks are critical. Items that should be checked for all major drainage structures are (US Army Corps of Engineers, USACE, 2007):

- Size (culverts may not be square).
- Skew angle (several systems in use).
- Type or nomenclature (possibly changed from plans).
- Flow line elevations are very important and should be accurately checked.
- The station location of the structure centerline with regard to the traverse line should be carefully noted.

Utilities that have been relocated should be carefully checked for compliance with plans and guidelines. Incorrect identification of various pipes, tiles, and tubes can result in difficulties. Since the subject is somewhat complicated, it is important to keep track of this type of information for the future.

Project monumentation is sometimes a requirement of as-built surveys since it is common to monument traverse lines and baselines for major projects. Their location should be checked for accuracy. In many areas, it is common for such monumentation to be done by maintenance people who are not at all familiar with surveying and therefore the work is not always as accurate as would be desired.

2.3.9 Deformation Survey

Structural deformation surveying is a crucial aspect of monitoring the stability and integrity of various engineering and building structures. This process involves tracking the spatial displacement of specific points within or around a structure to assess any deformation that may occur over time. The key elements of structural deformation surveying include reference and monitoring points, reference point networks, monitoring techniques, and relative displacement observations (US Army Corps of Engineers, USACE, 2018).

- **Reference and Monitoring Points:** Reference points serve as fixed benchmarks against which the displacement of monitoring points is measured. These reference points may be situated within the structure itself or in the surrounding terrain, depending on the desired level of deformation analysis. Monitoring points, also known as object points, are selected locations whose movement is of interest.

- **Reference Point Network:** The establishment of a robust reference point network is crucial for accurate deformation monitoring. Reference points are ideally placed in the rock foundation at a depth unaffected by land subsidence or other fluctuations. These points are permanently monumented to ensure long-term stability. Additionally, connections to the SANSRS enhance the accuracy of deformation measurements.
- **Monitoring Techniques:** Deformation monitoring involves measuring both horizontal and vertical displacement to capture multiplanar movement accurately. Techniques such as angle measurements, optical distance measurements, leveling, and traverses are employed to assess deformation along orthogonal lines within the structure or its foundation.
- **Relative Displacement Observations:** Routine monitoring of trends at selected points along the crest and vertical lines helps track short-term behavior and identify potential issues. Simple angle measurements and leveling techniques are often used for these observations. Extending leveling beyond the abutments ensures comprehensive data collection.

2.3.9.1 Deformation Surveying Design (Monitoring Plan)

Each monitored structure should have a technical report published for the instrumentation and/or surveying scheme to document the monitoring plan and its intended performance. A project-specific measurement scheme and its operating procedures should be developed for the monitoring system (see
Figure 6. Separate designs should be completed for the instrumentation plan and for the proposed measurement scheme (US Army Corps of Engineers, USACE, 2018).

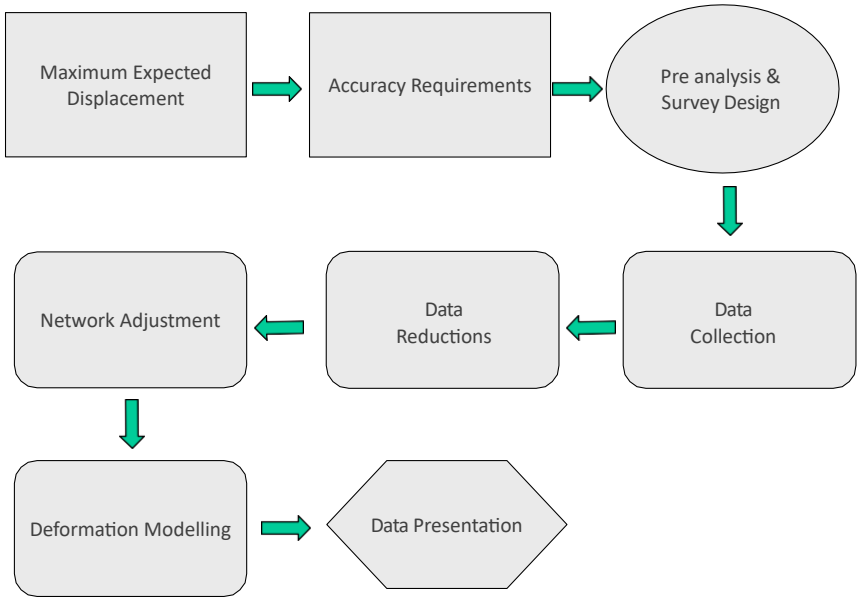

Figure 6: Deformation Survey Data Flow.

- **Survey System Design.** Although accuracy and sensitivity criteria may differ considerably between various monitoring applications, the basic principles of the design of monitoring schemes and their geometrical analysis remain the same. For example, a study on the stability of magnets in a nuclear accelerator may require the determination of relative displacements with an accuracy of ±0.05 mm, while a settlement study of a rock-fill dam may require only ±10 mm accuracy. Although in both cases, the monitoring techniques and instrumentation may differ, the same basic methodology applies to the design and analysis of the deformation measurements.

- Instrumentation Plan (Design). The instrumentation plan is mainly concerned with building or installing the physical network of surface movement points for a monitoring project. Contained in the instrumentation plan are guidelines, procedures, and descriptions for:
    - Required equipment, supplies, and materials.
    - Monument types, functions, and operating principles.
    - Procedures for the installation and protection of monuments.
    - Location and coverage of monitoring points on the project; and
    - Maintenance and inspection of the monitoring network.

The plan contains drawings, product guidelines, and other documents that completely describe the proposed instrumentation and methods for fabrication; testing; installation; and protection and maintenance of instruments and monuments.

- Measurement Scheme (Design). The design of the survey measurement scheme should include analysis and guidelines for:
    - Predicted performance of the structure,
    - Measurement accuracy requirements,
    - Positioning accuracy requirements,
    - Number and types of measurements,
    - Selection of instrument type and precision,
    - Data collection and field procedures,
    - Data reduction and processing procedures,
    - Data analysis and modeling procedures,
    - Reporting standards and formats, and
    - Project management and data archiving.

The main technique used to design and evaluate measurement schemes for accuracy is known as "network pre-analysis." Software applications specially written for pre-analysis and adjustment are used to compute expected errors and positioning confidence for all surveyed points in the monitoring network.

- **Data Collection.** The data collection required for a project survey is specifically prescribed by the results of network pre-analysis. The data collection scheme must provide built-in levels of both accuracy and reliability to ensure acceptance of the raw data.
    - Accuracy. Achieving the required accuracy for monitoring surveys is based on instrument performance and observing procedures. Minimum instrument resolution, data collection options, and proper operating instructions are determined from manufacturer guidelines. The actual data collection is executed per the results of network pre-analysis so that the quality of the results can be verified during data processing and post-analysis of the network adjustment.
    - **Reliability.** Reliability in the raw measurements requires a system of redundant measurements, sufficient geometric closure, and strength in the network configuration. Geodetic surveying methods can yield high redundancy in the design of the data collection scheme.
- **Data Processing.** Raw survey data must be converted into meaningful engineering values during the data processing stage. Several major categories of data reductions are:
    - Applying pre-determined calibration values to the raw measurements,
    - Finding mean values for repeated measurements of the same observable,

- Data quality assessment and statistical testing during least squares adjustment, and
- Measurement outlier detection and data cleaning prior to the final adjustment.

Procedures for data reductions should be based on the most rigorous formulas and data processing techniques available. These procedures are applied consistently to each monitoring survey to ensure comparable results. Network adjustment software based on least squares techniques is strongly recommended for data processing. Least squares adjustment techniques are used to compute the coordinates and survey accuracy for each point in the monitoring network. Network adjustment processing also identifies measurement errors by statistically testing the observation residuals.

- **Data Analysis.** Geometric modeling is used to analyze spatial displacements. General movement trends are described using a sufficient number of discrete point displacements (d*n*):

  d*n* (Δx, Δy, Δz) for *n* = point number

  Point displacements are calculated by differencing the adjusted coordinates for the most recent survey campaign (*f*), from the coordinates obtained at some reference time (*i*),
  For example:

  $\Delta x = x_f - x_i$ is the x coordinate displacement,
  $\Delta y = y_f - y_i$ is the y coordinate displacement,
  $\Delta z = z_f - z_i$ is the z coordinate displacement, and
  $\Delta t = t_f - t_i$ is the time difference between surveys.

Each movement vector has magnitude and direction expressed as point displacement coordinate differences. Collectively, these vectors describe the displacement field over a given time interval. Displacements that exceed the amount of movement expected under normal operating conditions will indicate possible abnormal behavior. A comparison of the magnitude of the calculated displacement and its associated survey accuracy indicates whether the reported movement is more likely due to survey error:

$|d_n| < (e_n)$ where
$|d_n| = \text{sqrt}\,(\Delta x^2 + \Delta y^2 + \Delta z^2)$ for point *n*, is the magnitude of the displacement,
(e_n) = max dimension of combined 95% confidence ellipse for point *n* = $(1.96)\ \text{sqrt}\,(\sigma_f{}^2 + \sigma_i{}^2)$,

and
σ_f is the standard error in position for the (final) or most recent survey,
σ_i is the standard error in position for the (initial) or reference survey.

For example, if the adjusted coordinates for point *n* in the initial survey were:

x_i = 1000.000 m
y_i = 1000.000 m
z_i = 1000.000 m

and the adjusted coordinates for the same point in the final survey were:

x_f = 1000.006 m
y_f = 1000.002 m
z_f = 1000.002 m

then the calculated displacement components for point *n* would be:

Δx = 6 mm, Δy = 2 mm, Δz = 2 mm

Assuming the horizontal position has a standard deviation of σ_h = 1.5 mm for both surveys and similarly the vertical position has a standard deviation of σ_v = 2.0 mm, as reported from the adjustment results, then the combined (95%) confidence in the horizontal displacement would be:

$$(1.96)\ \text{sqrt}\ (\sigma_f^{\ 2} + \sigma_i^{\ 2}) = (1.96)\ \text{sqrt}\ (2.25 + 2.25) \sim 4.2 \text{ mm at 95\% confidence}$$

The magnitude of the horizontal displacement is:

$$|d_h| = \text{sqrt}\ (\Delta x^2 + \Delta y^2) = \text{sqrt}\ (36 + 4) = 6.3 \text{ mm}$$

These results show that the horizontal component exceeds the expected survey error margin and is likely due to the actual movement of point *n* in the horizontal plane.

Confidence in the vertical displacement would be:

$$(1.96)\ \text{sqrt}\ (\sigma_f^{\ 2} + \sigma_i^{\ 2}) = (1.96)\ \text{sqrt}\ (4 + 4) \sim 5.5 \text{ mm at 95\% confidence}$$

The magnitude of the vertical displacement is:

$$|d_v| = 2.0 \text{ mm}$$

The magnitude of the vertical displacement is much smaller than the confidence in the vertical displacement, and it therefore does not indicate a significant vertical movement. If the structure were to normally experience a cyclic movement of 10 mm (horizontally) and 1 mm (vertically) over the course of one year, and if our example deformation surveys were made six months apart, then the above results would be consistent with expected behavior.

Data Presentation - Survey reports for monitoring projects should have a standardized format. Reports should contain a summary of the results in both tabulated and graphical form. All supporting information, analyses, and data should be documented in an appendix format. Conclusions and recommendations should be clearly presented in an executive summary.

2.3.9.2 Reference Point Monumentation

A monument used for deformation monitoring is any structure or device that defines a point in the survey network. Monuments can be classified as either a reference point or a monitoring point. A reference point typically is located away from the structure and is to be "occupied" during the survey, while a monitoring (or object) point is located directly on the structure and is to be "monitored" during the survey. Each must have long-term stability of less than 0.5 mm both horizontally and vertically with respect to the surrounding area. A permanent one (1) mm diameter reference mark, or forced centering device, should be used for every monitoring point monument (US Army Corps of Engineers, USACE, 2018).

- **Reference Point Monuments.** Reference points can be either a steel pipe pile or a cast-in-place reinforced concrete pile (see Figure 7). If a steel pipe pile is used, the nominal diameter will be no less than 20cm, while the wall thickness will be no less than that for standard-weight pipe. If using a cast-in-place reinforced concrete pile, the nominal diameter will also be no less than 20cm (see Figure 7).

Figure 7: Reference Point Monumentation. Concrete Pier Construction Vicinity of a Lock and Dam. Forced Centering Plug Set into Concrete Pier

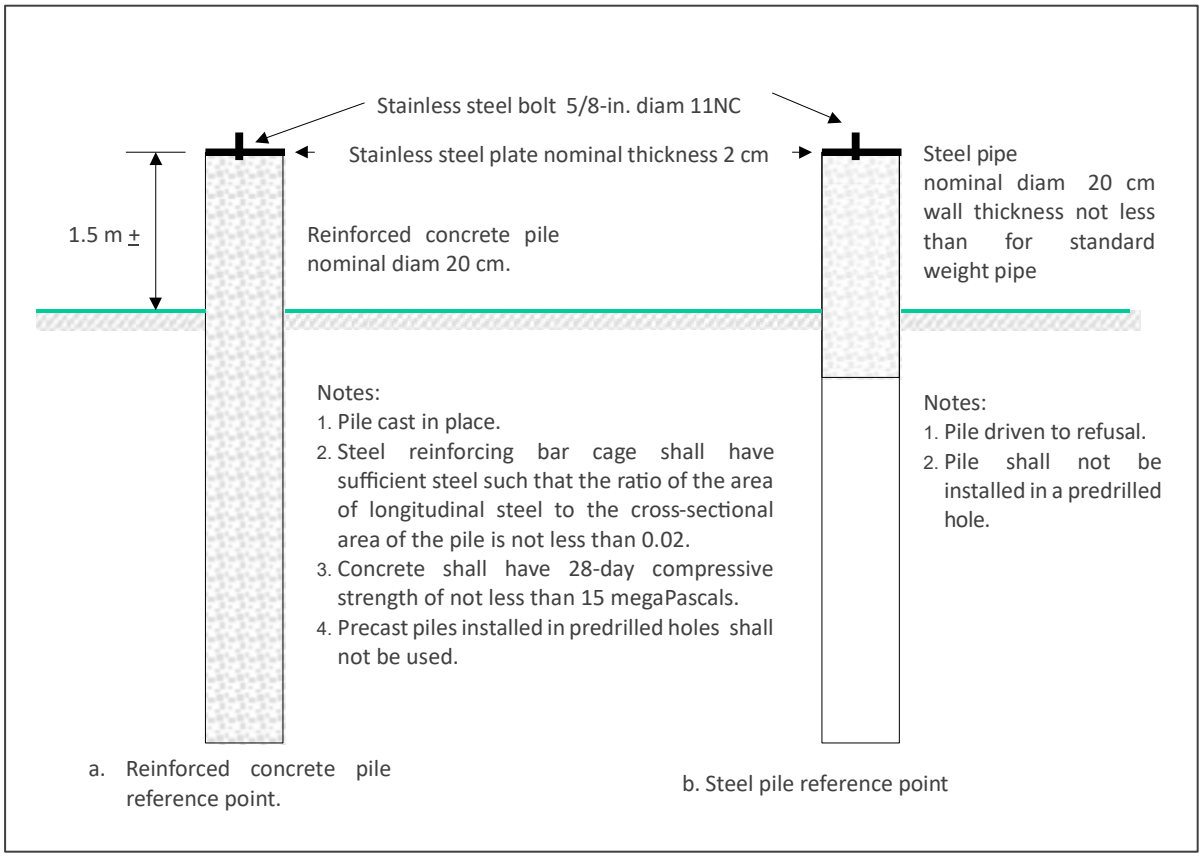

Figure 8: Reference Point Monumentation. Detail for Reinforced Concrete Pile or Steel Pile Construction

- **Reference Point Installation.** Reference points placed on the earth are installed to a depth equal to at least twice the depth of frost penetration in the project area. The reference point extends above ground level to a convenient height (e.g., 1.5 m) where the equipment can be force centered. Typically, at the top of such a reference point pile, a stainless-steel plate not less than 2 cm thick is cast into the top of the pile using a minimum of four steel reinforcing bar anchors welded to the underside of the plate. In the center of the plate, a 16 mm diameter 11NC steel bolt is welded to the plate to allow survey equipment to be attached.
    - **Steel Pipe Pile.** A steel pipe pile is installed by driving it until refusal. If refusal occurs at a depth of less than twice the depth of frost penetration in the project area, the pile is removed, and its installation is attempted in another location. Steel pipes placed in oversized pre-drilled holes and backfilled will not be used as reference points. For pipe piles terminating at or slightly below ground level, a convex stainless-steel plate and stub will be installed as described above. The plate will be convex as required for leveling observations and will have an etched cross at the highest point of the convex surface for horizontal observation. It is recommended that such piles also have

a cylindrical rim and cover around it for protection. If a cylindrical rim and cover is used, it is further recommended the cover be buried for easy recovery with a metal detector, as well as to minimize the chance of vandalism.

- **Cast-in-Place Reinforced Concrete Pile.** A cast-in-place reinforced concrete pile is installed by first drilling a hole to at least twice the depth of frost penetration in the project area. The cage of steel reinforcing bars used will have a cross-sectional area of steel to concrete ratio of not less than 0.02. After the cage is formed, it is placed in the hole. Concrete with a 28-day compressive strength of not less than 15 megapascals is then poured into the form. Precast reinforced concrete piles driven into pre-drilled holes, or placed in oversized pre-drilled holes and backfilled, will not be used for reference points. Reference points installed in rock or concrete consist of a stainless-steel plate as described above, except with a steel reinforcing bar stub welded to the underside. For installation, a hole at least 50% larger than the stub is drilled into sound rock or concrete. The plate with the stub attached is secured to the rock or concrete using adequate epoxy adhesive to completely fill the void between the stub and the rock or concrete.
- **Insulation.** Projects subjected to cold weather conditions will have an insulation sleeve installed around the reference point pile that extends above the ground. The installation of a sleeve is to eliminate the possibility of temperature-induced pile movements that may be the result of solar radiation (i.e., temperature variation due to time of day). When this is the case, the sleeve should have an R value of not less than 10.
- **Stability.** If possible, the reference points should be installed at least a year prior to their use to minimize the effects of pile rebound and shrinkage. If this is not practical, no less than a month prior to its use will suffice.

- **Monitoring Point Monuments.** Monitoring points installed in earth consist of a nominal 3 m length of square steel hollow structural section with a nominal side length of 5 cm and a wall thickness not less than that for a standard weight square steel hollow structural section. The base of the section is sharpened by cutting it at a 45-degree angle. Welded approximately 15 cm from the base, is one length of 10 mm thick, 20 cm diameter circular helix, with a pitch of 7 cm. Welded to the top of the pipe, is a steel plate not less than 5 mm thick. In the center of the plate, a 16 mm, 11NC steel bolt, on which survey equipment is to be connected, is drilled through, and welded to the plate. Some method (e.g., through the use of a cap) should be used to protect the threads of the bolt during the time survey equipment is not attached.
- **Monitoring Point Installation.** Monitoring points set directly in rock or concrete may be either a steel bolt or a steel insert into which survey equipment is force centered (see Figure 9). Installation of these types of monuments is as follows:
  - **Steel Bolt.** The steel bolt is drilled through and welded to a 5-cm diameter, 1 cm thick steel plate. A steel reinforcing bar stub of suitable length is welded to the head of the bolt. A hole approximately 50% larger than the stub is drilled in sound rock or concrete. The plate with the stub attached is secured to the rock or concrete using adequate epoxy adhesive to completely fill the void between the stub and the rock or concrete. The threads of the bolt should be protected during the time survey equipment is not attached (e.g., by use of a cap). upside down.

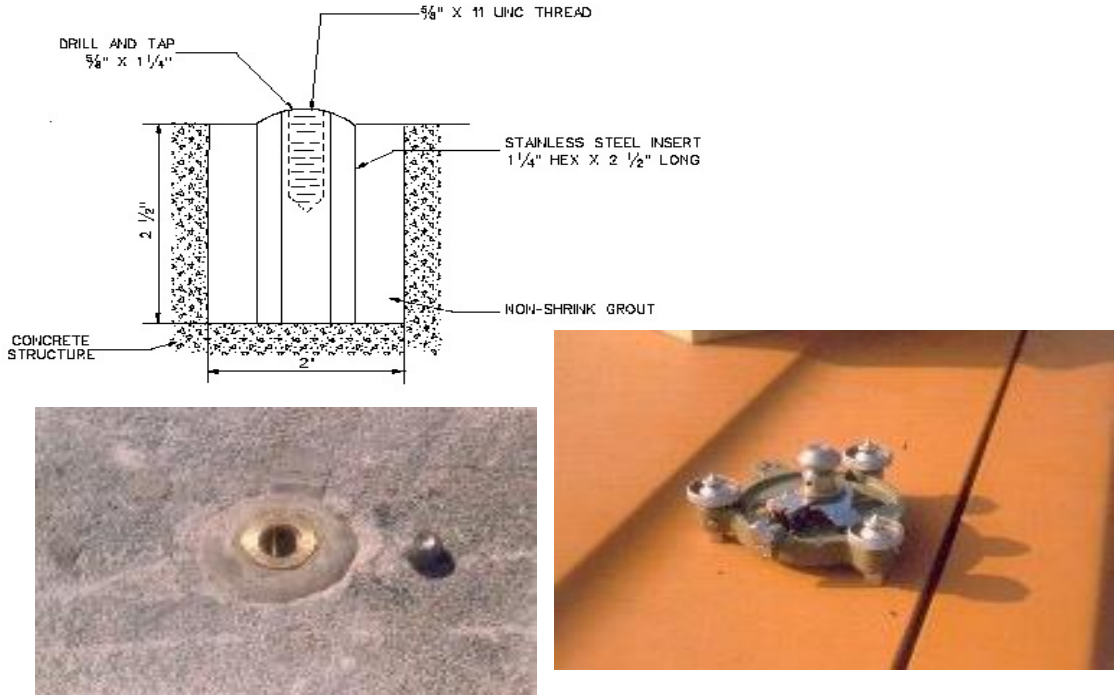

Figure 9: Target Plug Set on Concrete Structure. Forced Centering Device on Tribrach Shown Upside Down

- **Steel Insert.** Steel inserts have been designed as commercial off-the-shelf items. Manufacturer instructions for proper installation of the insert should be followed.
- **Other Materials.** Monitoring points on materials (e.g., steel, masonry, etc.) other than described in the previous paragraphs will be permanently affixed. For object points to be mounted on steel, a steel bolt welded to the steel may be suitable. For masonry, or other material, a steel bolt, plate, rear stub, or a steel insert may be suitable.

- **Monitoring Point Targets.** A target is a device with a well-defined aiming point that is placed vertically over or attached to a monument. The purpose of a target is to connect the measurement to a physical object. A target is typically installed only for the period of the survey, in some cases, the monument may be a target itself.
  - **Optical Theodolites.** Force-centered, standard target sets designed for one second theodolites, or the actual reference mark on the monument itself can be used as a target.
  - **Electronic Total Station.** Force-centered, standard target set/prism combination used with a particular total station. Target set/prism combinations not matched to a particular total station will not be used. Target set/prism combinations for total stations which are non-coaxial, will be tilting target set/prism combinations that allow for alignment with the line of observation.
  - **Electronic Distance Measurement (EDM) Prisms.** EDM targets will be the reflectors included with the EDM unit. Prisms not matched to a particular EDM will not be used.
  - **Chaining Points.** Targets for taped distances will be the monuments themselves.
  - **Leveling Points.** Targets for leveled height difference measurements will be the monuments themselves. If the monuments are steel inserts, the targets will be stainless steel plugs designed for the purpose. If more than one plug is to be used on a project, the plugs will be of the same size. Standard vertical control benchmarks may also be used, as shown in Figure 10.

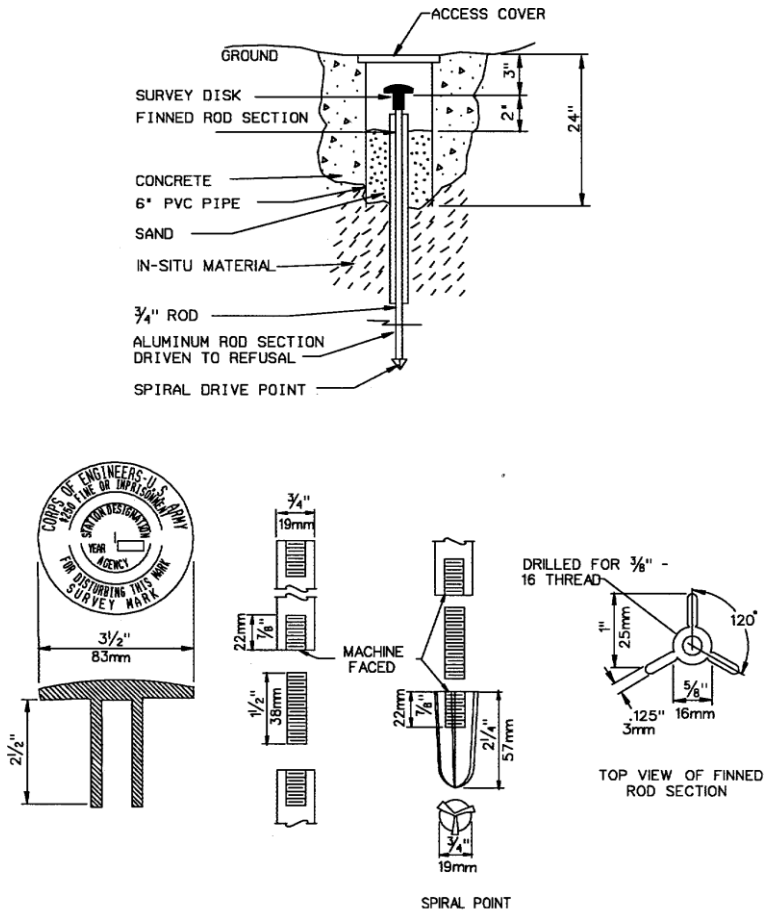

Figure 10: External Deep-Driven Benchmark Design—for Vertical Control Only

- **Panel Points.** Photogrammetric survey targets will consist of a high-contrast, white dot on a black background. The diameter of the white dot is chosen so as to yield an average image diameter of 60 microns. The black background typically is 5 times the diameter of the white target.
- **GNSS Reference Marks.** Targets for GNSS surveys must be the monuments themselves. Antenna offsets will be measured to relate the antenna phase center to the station marks.

2.3.10 Survey Records and Report

The objective of maintaining comprehensive survey records is to ensure the accuracy, reliability, and traceability of survey measurements. These records serve as a permanent reference for future surveys and provide a basis for quality control and assurance.

- **Responsibilities:**
  - The Survey Manager or designated personnel are responsible for overseeing the creation, maintenance, and accessibility of survey records.
  - Surveyors are responsible for accurately documenting all survey activities, measurements, and observations in the field and office.
- **Types of Records:**
  - **Field Notes:** Detailed notes should be taken during field surveys, including the date, time, weather conditions, equipment used, and any deviations from the survey plan.
  - **Survey Data:** Raw data collected from instruments, including GNSS coordinates, angles, distances, and elevations.
  - **Sketches and Drawings:** Hand-drawn or digital sketches depicting the layout of the survey area, control points, and any relevant features.
  - **Photographs:** Photographs of the survey area, control points, and significant features.

- **Reports:** Formal reports summarizing the survey results, methodology, and any deviations from the survey plan.

- **Retention Period:** Survey records should be retained for a minimum of 10 years after the completion of the project or as required by local regulations.
- **Access and Security:** Survey records should be stored in a secure location with restricted access to authorized personnel only. Digital records should be encrypted and backed up regularly.
- **Review and Approval:** All survey records should be reviewed and approved by the Survey Manager or designated personnel before being finalized and stored.
- **Documentation:** A comprehensive index or database should be maintained to track all survey records, including their location, format, and retention period.
- **Disposal:** Survey records should be disposed of in accordance with the GEOSA policies and local regulations once the retention period has expired.
- **Training:** Surveyors should receive training on the importance of accurate record-keeping and the specific requirements for maintaining survey records.
- **Audits:** Periodic audits should be conducted to ensure compliance with record-keeping procedures and identify any areas for improvement.
- **Continuous Improvement:** Feedback from audits and project reviews should be used to update and improve survey record-keeping procedures.
- References: The survey records should reference any relevant standards, guidelines, or guidelines used in the survey process.
- **Appendices:** Include any forms, templates, or checklists used for documenting survey records.
- **Glossary:** Provide definitions for any technical terms or acronyms used in the survey records.

2.4 Topographical Surveys (Terrestrial)

2.4.1 Purpose

This guideline provides for the requirements for topographical surveys through terrestrial surveying processes in the Kingdom of Saudi Arabia.

Topographical surveys measure and record the form of the land in three-dimensional space and the physical and human-made features (topographical detail) on the surface of the land. Terrestrial survey methods are used usually when the area to be surveyed is limited in extent and/or when a greater level of detail and/or accuracy is required. Such topographical surveys are sometimes called site surveys.

Topographical surveys may be undertaken for different purposes, such as a strip survey to plan the route of a road, a site survey for the development of the site or a site survey for the planning of water reservoir. The level of detail and accuracy requirements may differ from one to the other.

2.4.2 Connection to National Geodetic Network

All topographical surveys must be connected to the National Geodetic Network of the Kingdom of Saudi Arabia. The National Geodetic Network is defined by the Saudi Arabia National Spatial Reference System (SANSRS). Refer to the Guidelines for Geodesy for the Kingdom of Saudi Arabia ()

All coordinates are to be given in the Universal Transverse Mercator (UTM) Projection as Eastings and Northings in the relevant UTM Zone (36N, 37N, 38N, 39N, and 40N). All measurements must be given in the SI system of units, with distances given in meters.

Control points must be established and surveyed in accordance with the guideline for Control Surveys (see .). The control points must be located in positions where the landform and all the required features can be observed over the area under survey.

2.4.3 Accuracy Requirements for Topographical Surveys

The accuracy of a topographical survey shall be quantified in terms of accuracy in meters at the 95% confidence level, to be consistent with the ISO definition (Joint Committee for Guides in Meteorology, JCGM, 2020).

The quality of a survey shall be quantified in terms of the following accuracy measure.

Local Accuracy is the accuracy of the horizontal and/or vertical coordinates of a surveyed point relative to the survey in which it was observed and is free from the influence of any imprecision or inaccuracy in the underlying datum realisation. Therefore, local accuracy reflects only the accuracy resulting from survey measurements, measurement precisions, network geometry and the choice of constraint.

2.4.3.1 Positional Accuracy of Topographical Detail

The positional accuracy of topographic detail surveyed must be accurate dependent on the purpose of the survey, as indicated in Table 8.

Table 8: Positional Accuracy of Topographical Detail

Resolution (Nominal Map Scale)	Local Accuracy (95%) (in meters)
1:200	0.10
1:500	0.25
1:1000	0.50
1:2000	1.00
1:2500	1.25
1:4000	2.00
1:5000	2.25
1:10000	5.00

Based on ASPRS Accuracy Standards for Large-Scale Maps, as given in the U.S. Federal Geographic Data Committee (FGDC). Geospatial Positioning Accuracy Standards Part 3: National Standard for Spatial Data Accuracy (Federal Geographic Data Committee, FGDC, 1998b)

The position of all topographical detail must be checked by independent survey and must meet the positional accuracy requirements.

2.4.3.2 Elevation Accuracy

Elevation depicted as contours must have an accuracy of two-thirds of the contour interval, at the 95% confidence level. Alternatively, the contour interval depicted in the topographical survey must not be less than 1.33 times the vertical accuracy of the topographical survey in relation to the elevation of the control survey points and/or benchmarks used for the survey. Based on ASPRS Accuracy Standards for Large-Scale Maps, as given in the U.S. Federal Geographic Data Committee (FGDC). Geospatial Positioning Accuracy Standards Part 3: National Standard for Spatial Data Accuracy (Federal Geographic Data Committee, FGDC, 1998b).

Spot elevations must have an accuracy of one-third of the contour interval, at the 95% confidence level. For example, where the topographical survey is for a contour interval of 1m then the spot elevation must have a vertical accuracy of 0,33m. Based on ASPRS Accuracy Standards for Large-Scale Maps, as given in the U.S. Federal Geographic Data Committee (FGDC). Geospatial Positioning Accuracy Standards Part 3: National Standard for Spatial Data Accuracy (Federal Geographic Data Committee, FGDC, 1998b).

2.4.3.3 Accuracy of Topographical Plan/Map

The topographical detail on the topographical plan must be shown in its correct position with no cartographic displacement.

In the case of hardcopy (printed) topographical plan, the topographical detail must be depicted to within 0,5mm at the scale of the plan of its surveyed position. The coordinate grid lines of such plan must be depicted to within 0,25mm at the scale of the plan.

2.4.4 Topographical Features to be Surveyed.

The topographical features to be surveyed will be based on the purpose of the survey and the area under survey. The topographical features surveyed must be identified and classed in accordance with the Kingdom of Saudi Arabian (KSA) National Geospatial Feature Concept Dictionary (General Authority for Survey and Geospatial Information, GEOSA, 2022), as shown in Section 3.2 below.

Should there be any topographic features that must be surveyed for the purpose of the survey and do not appear in the feature list of the KSA National Geospatial Feature Concept Dictionary, then they must be identified and classed in accordance with the secondary feature list given in Section 3.3 below, which is adapted from the landmark symbols for topographic maps at scale 1:1000 of the Ministry for Municipal and Rural Areas and Housing (MOMRAH).

Topographic features are to be surveyed and processed geometrically as either:

- Point feature,
- Line feature, or
- Area (polygonal) features.

Point Features, such as a lamp post or a single tree, have the point co-ordinate at the center of the feature.

Line Features, such as a furrow or a cable, may be either a straight line or a polyline. In the case of a straight line just the end points are coordinated. In the case of a polyline there must be sufficient coordinates to correctly represent the position of the feature. In some cases, a line feature may have a width, in which case the center-line of the feature is coordinated, and the width is given.

Area Features, such as a cultivated field or a building, are represented by a boundary line, which is a polyline. Should the area feature have an inner part excluded, an 'island,' then the boundary of that inner exclusion must be given by polyline.

Spot elevations covering the entire survey limits, showing high points, low points, grade changes, and at sufficient intervals to represent the general character of the terrain, must be surveyed and depicted with its elevation.

Where a digital elevation model (DEM) is measured directly, or computed from measured elevations or elevation point clouds, the DEM must meet the elevation accuracy. The DEM may be represented as either a grid of elevation posts, or as a triangulated irregular network (TIN) with elevation posts at the apex of the triangles. The post spacing must be as determined by the purpose of the topographical survey.

Elevation break lines must be surveyed and depicted in places where there is an abrupt change in the elevation of the landform, such as the edge of a cliff, or edge of an embankment.

2.4.5 Topographical Plan/Map Requirements

The topographical plan/map must be prepared to cover the area of interest with an overlap of 25 mm at the plan scale on all four sides.
The plan/map must have:

- A title block providing the name of the area covered by the plan/map, and the date of survey.
- The scale, which must be commensurate with the purpose of the topographical survey – usually between 1:500 (for high level of detail) and 1:5000 (for lower level of detail, covering a larger area).
- Coordinate grid lines, or intersections, spaced at 10 cm or 15 cm with the coordinate values given immediately on the sides of the neat line of the plan/map.
- A True north arrow.
- All the features surveyed, for the purpose of the topographical survey, depicted using standardised symbology.
- Contours, with the elevation value of the contour shown in the direction of increasing elevation, and spot elevations depicted as a dot, with the elevation value given to two decimals of a meter, immediately to the right of the dot.
- The cadastral boundaries of all approved land parcels, together with their land parcel number, which fall within the area of the plan/map.
- All control points and benchmarks falling within the area of the plan/map, which were used in the topographical survey, together with their number, depicted.
- The responsible surveyor must sign the plan/map with the date of signature.

2.5 Cadastral Surveys

2.5.1 Purpose

This guideline provides for the requirements for cadastral surveys of rights in land in the Kingdom of Saudi Arabia.

Cadastral surveys demarcate the extent of rights in land, through the measurement of the cadastral boundaries, the recording of the position of the rights in land, and matters related thereto.

2.5.2 Compliance with Legislation

All cadastral surveys must be performed and comply with the requirements of all the legislation applicable to rights in land and associated real estate matters in the Kingdom of Saudi Arabia.

Cadastral surveys for real estate rights of land parcels (real estate unit) falling within designated real estate units must comply with the Law of Real Estate Registration (Royal Decree No. M/6).

2.5.3 Connection to National Geodetic Network

All cadastral surveys must be connected to the National Geodetic Network of the Kingdom of Saudi Arabia. The National Geodetic Network is defined by the Saudi Arabia National Spatial Reference System (SANSRS). Refer to the Guidelines for Geodesy for the Kingdom of Saudi Arabia ()

All coordinates are to be given in the Universal Transverse Mercator (UTM) Projection as Eastings and Northings in the relevant UTM Zone (36N, 37N, 38N, 39N, and 40N).

All measurements must be given in the SI system of units, with distances given in meters.

All distances must be reduced to distances on the reference ellipsoid.

Control points must be established and surveyed in accordance with the guideline for Control Surveys (). The control points must be located in positions where cadastral monuments will be verified or placed and checked or re-established, or for the measurement of natural boundaries.

2.5.4 Cadastral Boundary

Rights in land are demarcated by cadastral boundaries of the land parcel for which the rights apply.

All cadastral boundaries must be unambiguously defined and accurately measured to ensure that the rights in land are clearly delimited, with the objective of minimizing disputes over the rights in land.

Adjoining land parcels must have a common boundary between them. The common boundaries must be demarcated in such a manner as to ensure that there is no overlap nor gap between the adjoining land parcels.

The newly surveyed cadastral boundaries must be pointed out to all parties with rights to the land parcel and all adjoining land parcels.

There are various types of boundaries that are applicable:

2.5.4.1 Straight-line Boundary

Straight-line boundaries are to be used where no suitable permanent natural feature is available to demarcate the land parcel. These are imaginary straight lines, defined with end points. A land parcel may be defined by numerous straight-line boundaries, depending on the shape of the land parcel.

The end points of all straight-line boundaries must be surveyed to determine the coordinates of the end points, as well as the length/distance and direction between the two points.

2.5.4.2 Circular-line Boundary

A circular-line (or arc) boundary may be used as a cadastral boundary. These are an imaginary segment of a circle, defined with end points. In such cases the coordinates of the center point of the circle must be given, as well as the radius of the circle.

The end points of all circular-line boundaries must be surveyed to determine the coordinates of the end points.

2.5.4.3 Streamline Boundary

Where a stream (includes a river) is used to demarcate the boundary of a land parcel, the boundary is, under normal circumstances, to be the middle line of the stream or river.

In exceptional cases, one of the banks of the stream may demarcate the boundary. In such cases it must be unambiguously given as to which bank is the boundary, inner bank, or outer bank. In the former case the stream is then excluded from the land parcel, and in the latter case the stream is included in the land parcel.

To determine the middle of the stream the two banks must be surveyed, and then the middle line determined as being equidistant from the two banks.

The banks of the stream are taken as the highest level of the water during normal flow reached during the rainfall season. Evidence of such a level is to be used in determining the position of the bank.

The streamline boundary is to be depicted as a curvilinear boundary, with appropriate accuracy.

Should the position of a bank of the stream be changed through abnormal flood waters, or by non-natural means, such as canalization of the stream course, then the streamline boundary may be changed through substitution of the curvilinear boundary with a series of straight-line boundaries. The substituting straight-line boundaries must closely approximate the curvilinear boundary and must not result in a change of the area of the land parcel and the area of any land parcel adjacent to it. All affected persons with rights in the adjacent land parcels must agree to the substitution of the streamline boundary with the straight-line boundaries.

2.5.4.4 Coastal Boundary

Where a coastal line, such as the mean high-water mark of the coastal waters, is used to demarcate the boundary of the land parcel, the coastal boundary must be unambiguously described as such. This coastal boundary will be represented as a curvilinear boundary.

The position of the coastal line must be determined with appropriate accuracy, based on observation of evidence of the reach of the coastal line and from tidal information. Where the cadastral boundary is a line offset from the coastal line, it must be a line parallel to the coastal line, with the distance apart given.

Should the position of the coastal line be changed through abnormal storm tides and abnormal beach erosion, or by non-natural means, such as excavation of the beach for mining purposes, then the coastal boundary may be changed through substitution of the curvilinear boundary with a series of straight-line boundaries. The substituting straight-line boundaries must closely approximate the curvilinear boundary and must not result in a change of the area of the land parcel, at that time. In such cases of boundary substitution, the Minister responsible for coastal matters must agree to the substitution of the coastal boundary.

2.5.4.5 Other Natural Feature Boundary

In cases where a well-defined natural feature, such as a cliff edge, a row of trees, a stone wall, or a wall of a building, exists then the natural feature may be used in place of a straight-line boundary. The part of the natural feature that demarcates the cadastral boundary must be unambiguously described. This natural feature boundary will be represented as a curvilinear boundary.

Should the natural feature demarcating the cadastral boundary be destroyed or moved, then the natural feature boundary may be changed through substitution of the curvilinear boundary with a series of straight-line boundaries. The substituting straight-line boundaries must closely approximate the curvilinear boundary and must not result in a change of the area of the land parcel and the area of any land parcel adjacent to it. All affected persons with rights in the adjacent land parcels must agree to the substitution of the natural feature boundary with the straight-line boundaries.

2.5.5 Monumentation

The end points of all straight-line and circular-line cadastral boundaries must be demarcated with a cadastral monument (markers).

Where a straight-line cadastral boundary terminates at a streamline, coastal or other natural feature cadastral boundary, and it is not possible to place a cadastral monument at the end of such cadastral boundary, then a cadastral monument must be placed at an indicatory point, which is on the straight-line cadastral boundary and as close as possible to the end point.

Cadastral monuments must be of a permanent nature, and not subject to movement caused by any activities other than natural phenomena. Cadastral monuments may not be moved from their position, unless for exceptional reasons, such as construction of a building. In such cases, the cadastral monument may only be moved under the supervision of a licensed cadastral surveyor. Movement of a cadastral monument other than under supervision of a licensed cadastral surveyor is deemed an unlawful act and may be punishable under the laws of the Kingdom of Saudi Arabia.

In urban areas, cadastral monuments will normally be a 12 mm iron peg of length at least 400 mm. The peg must be driven vertically into the ground so as to protrude no more than 10mm above the ground level. Where it is not possible to place such peg, such as when a corner of a building occupies the position, then the corner of the building is to be used as the cadastral monument, or there is a surface rock or other permanent structure obstructing the placement of a peg, then a hole of 6 mm diameter and 20 mm depth is to be drilled and used as the cadastral monument, or a permanent fence post obstructing the placement of a peg, then the fence post is to be used as the cadastral monument.

In rural areas, cadastral monuments will normally be a 20 mm iron peg of length at least 500 mm. The peg must be driven vertically into the ground so as to protrude no more than 20 mm above the ground level. Where it is not possible to place such peg, such as when there is a surface rock obstructing the placement of a peg, then a hole of 8 mm diameter and 30 mm depth is to be drilled as the cadastral monument, or a permanent fence post obstructing the placement of a peg, then the fence post is to be used as the cadastral monument. A cairn of stones should be placed above the peg, or where such is not possible, a painted wooden stake, of at least 50mm diameter, must be placed between 10 cm and 30 cm from the peg. A red vertical line must be painted on the upper side of the wooden stake in the direction of the cadastral monument.

In such cases where the cadastral monument, as described above, cannot be placed or is not suitable for use in a particular circumstance, then the licenced cadastral surveyor must obtain approval from the competent authority in terms of mandate in the Kingdom of Saudi Arabia, to use an alternative monument.

The placed cadastral monuments of a land parcel must be pointed out to all parties who have rights to land which are affected by such cadastral monument. Such pointing out of the cadastral monument must be done within a period of six months of the placement of the cadastral monument.

2.5.6 Survey for Subdivision of Land

Where a new land parcel is created, the subdivision of the land must be performed by cadastral survey.

Each new land parcel created must be uniquely identified by a designated number, and, in the instance of a real estate unit within a designated real estate area, the official name of the real estate area, or in the instance of an urban area not in a real estate area, the official name of the urban area, or, in the instance of a rural area, the official name of the district. Such designated numbers must be allocated by the competent authority in terms of mandate in the Kingdom of Saudi Arabia, who shall keep a register of all designated numbers allocated. There must be no duplication of designated numbers within the same real estate area, same urban area, or same district.

Where a cadastral boundary of the subdivision coincides with the cadastral boundary of the parent land parcel then the cadastral boundary of the parent land parcel must be re-established by locating and surveying the end points of that cadastral boundary. The end points of the cadastral boundary of the subdivision land parcel must lie on the line of the cadastral boundary of the parent land parcel. Where the end point of a cadastral boundary of the subdivision land parcel coincides with that of the parent land parcel then the end point of the parent land parcel must be used for both land parcels.

Where the subdivision land parcel is wholly within the parent land parcel, then the subdivision land parcel must be connected to its parent. This must be done through providing the distance and direction between the nearest end point of the subdivision land parcel to the nearest end point of the parent land parcel.

The area of the subdivision land parcel must be deducted from the area of the parent land parcel, providing a remaining extent for the parent land parcel.

2.5.7 Re-establishment of Cadastral Boundary Survey

When a cadastral boundary must be re-established, the licensed cadastral surveyor must use all available cadastral records to re-construct the original position of the cadastral boundary. This includes the location and description of the cadastral monuments at the end points, or indicatory points where applicable, of the cadastral boundary. In the case of older rights to land without a cadastral survey, the licensed cadastral surveyor must use all available evidence to re-construct the position of the cadastral boundary. In this latter case all affected parties must agree to the position of the common cadastral boundary, with the objective to ensure that no unlawful transfer of rights in the land takes place.

The cadastral monuments at the end points, or indicatory points where applicable, must be located and surveyed to verify the position of the cadastral monument. Should the position not be the same, to within the accuracy requirements for the cadastral survey, as the re-constructed original position, then the found monument must be deemed to have been disturbed and cannot be used. In such cases a new monument must be placed by survey in the correct position. A report on the survey and description of the new cadastral monument must be submitted to the competent authority in terms of mandate in the Kingdom of Saudi Arabia. This report must be submitted within 3 months of the completion of the survey.

The description of the cadastral monument must also be verified. Should the description be different from the previous description then the monument found must be rejected, and a new cadastral monument placed at the correct position. A report on the survey and description of the new cadastral monument must be submitted to the competent authority in terms of mandate in the Kingdom of Saudi Arabia. This report must be submitted within 3 months of the completion of the survey.

When a cadastral monument must be replaced it must be done by survey to the required accuracy. The position must then be checked by independent survey to verify the position.

2.5.8 Accuracy Requirements

The accuracy of a cadastral survey shall be quantified in terms of accuracy in meters at the 95% confidence level, to be consistent with the ISO definition (Joint Committee for Guides in Meteorology, JCGM, 2020).

The quality of a survey shall be quantified in terms of the following accuracy measure.

Local Accuracy is the accuracy of the horizontal and/or vertical coordinates of a surveyed point relative to the survey in which it was observed and is free from the influence of any imprecision or inaccuracy in the underlying datum realisation. Therefore, local accuracy reflects only the accuracy resulting from survey measurements, measurement precisions, network geometry and the choice of constraint.

All surveyed distances must be measured to an accuracy of 10mm + 50 parts per million (ppm) or better, at a confidence level of 95%.

In a cadastral survey the accuracy of the relative positions between any two surveyed points must be within the tolerance of:

$$\sqrt{2\left(0.01+\frac{d}{20000}\right)^2}\ \text{metres}$$

Where:

d is the distance in meters between the points. (New South Wales, NSW, 1975)

2.5.9 Consolidation of Land Parcels

A land parcel may be created through the consolidation (merger) of existing land parcels.

The consolidated land parcel will inherit the cadastral boundaries and cadastral monuments of the constituent land parcels from which it is created.

The area of the consolidated land parcel will be the sum of the area of the constituent land parcel.

Where the coordinates of the end points of the cadastral boundaries are not on the same coordinate system then they must be converted to the coordinate system of the National Geodetic Network, which is the UTM coordinate system.

2.5.10 Building Unit Surveys

A land parcel may be subjected to real rights in the whole of a building or in unit(s) of a building, situated within the land parcel.

The cadastral boundaries of such a land parcel must be re-established.

Real rights in the whole of a building or a unit of a building will be demarcated by a building unit survey.

The whole of a building is demarcated by the outer side of the walls of the building.

The unit of a building is demarcated by the median line of the walls, floor, and ceiling of the building unit.

Should a building unit comprise of more than one level then each level must be demarcated separately. In such cases the building unit must be described as comprising of each such level (multi-level building unit).

Sufficient horizontal and vertical measurements must be made to demarcate the limits of the building unit. All such measurements must be made with an accuracy of 0.02 m.

The area of the whole of a building, or of each building unit must be calculated from the measurements of the demarcation of the boundaries of the building or building unit.

Rights may include exclusive-use areas, which are allocated to a particular building unit, such as patios, decks, parking areas or garden areas. The boundaries of the exclusive-use area may be demarcated by natural features or by imaginary straight-line boundaries.

Exclusive-use areas must be measured and related to the position of the building unit, the exterior walls of the building, or the cadastral boundaries of the land parcel. (Natural Resources Canada, 2022).

The area of the exclusive use area must be calculated from the measurements of the demarcation of the boundaries.

The remaining parts of the land parcel and common areas of buildings, such as stairwells, form part of the common property.

The position of the building(s) within the land parcel must be determined by survey in relation to the cadastral boundaries of the land parcel. (Natural Resources Canada, 2022).

The feature that was adopted as the exterior of the building should be noted. The horizontal measurements of the exterior of the building must be measured at the adopted feature. (Natural Resources Canada, 2022).

Sufficient horizontal and vertical measurements must be made to demonstrate the relationship of each building unit to the other building units and to the exterior of the building. All such measurements must be made with an accuracy of 0.05 m. (Natural Resources Canada, 2022).

The building units must be recorded on a building unit plan, indicating the building(s) in relation to the cadastral boundaries of the affected land parcel, the layout of each building unit per level of the building, with dimensions and building unit number clearly indicated, the exclusive use areas, with dimensions and exclusive use number clearly indicated, and with the area of each building unit and each exclusive use area tabulated.

The building unit plan may consist of one or more sheets depending on the size of the affected land parcel and the number of building units in the scheme. The first sheet must have:

a) The full description of the building unit scheme with the designation of the affected land parcel.
b) The affected land parcel drawn to scale, with the land parcel number of each adjoining land parcel, and the position of the building(s) which are subject to the building unit scheme.
c) Tabulation of all the building units, with the designated number, and its area.
d) Tabulation of all exclusive use areas, with the designated number, and its area.

Each floor of the building must be shown to scale, with each building unit depicted with its designated number and dimensions shown in meters to the nearest two decimals of a meter.

Should the scheme consist of too many building units to be included in one building plan sheet then subsequent sheets must be used, with each sheet being clearly numbered, including the first sheet, as 'Sheet … of … sheets.

2.5.11 Oil and Gas Surveys

Areas where rights to extract and transport oil and gas exist must be demarcated, and the boundaries of such areas must be surveyed in the same manner as for a cadastral survey for a land parcel.

The position of these boundaries must be depicted in relation to the land parcels over which the oil and gas rights exist. Where such boundary intersects a cadastral boundary the intersection point must be coordinated, and a cadastral monument placed at that position.

Where such boundaries coincide with the cadastral boundaries of a land parcel, the cadastral boundary must be adopted as the boundary.

2.5.12 Mining Surveys

Areas where rights to extract minerals from the ground exist, including quarrying, must be demarcated, and the boundaries of such areas must be surveyed in the same manner as for a cadastral survey of a land parcel.

The position of these boundaries must be depicted in relation to the land parcels over which the mining rights exist. Where such boundary intersects a cadastral boundary the intersection point must be coordinated, and a cadastral monument placed at that position.

Where such boundaries coincide with the cadastral boundaries of a land parcel, the cadastral boundary must be adopted as the boundary.

2.5 13 Surveys of Third-Party Rights in Land

All third-party rights in land must be recorded against the land parcel, such as right of easement, including right-of-way, lease area, and servitude for public utilities.

Where such third-party right area is parallel to the full length of a cadastral boundary then such area can be depicted as such on the cadastral plan of the affected land parcels.

For a right-of-way which is along a curvilinear feature, such as a road, then the center line of the road must be surveyed, and the width of the right-of-way given.

In all other instances the boundaries of the third-party right area must be demarcated and surveyed by cadastral survey. The end points of the boundaries must be marked with cadastral monuments.

The area of the third-party rights area must be calculated and given to the nearest square meter.

Where a third-party right which is not situated at ground level, the elevation of that third-party right above mean sea level, as determined from geodetic control stations or benchmarks, shall be reflected on the cadastral plan depicting that servitude or lease. Where such third-party right is situated in or adjacent to a building or permanent structure, the position of that third-party right should also refer directly to that structure. If it is not practical to determine the elevation relative to the mean sea level, then the difference in height between the third-party right and two permanent survey control stations in the near vicinity, must be recorded. In addition, the vertical distance from one corner point of the third-party right above the ground, must be measured and recorded.

2.5.14 Determination of Area

The area of the land parcel must be recorded, and given in square meters, to the nearest square meter for areas under 10,000 square meters, and in hectares, to four decimals of a hectare for areas of 1Ha and greater.

The area of a land parcel created by compilation must be the sum of the areas of the constituent component land parcels.

The area of a land parcel created by survey must be determined by calculation from either the coordinates of the end points of the straight-line boundaries or from a data traverse of the directions and distances of the cadastral boundaries.

Where the land parcel has a curvilinear boundary, then the area must be calculated from the sum of the rectilinear area and the balance area. For the rectilinear area, the curvilinear boundary is substituted by a straight line joining the two indicatory points, and then the area is calculated as for straight-line boundaries. For the balance area, the area formed by the substituted straight line and the curvilinear boundary is determined through either measurement of a plot of the boundaries to scale, or by coordinate area calculation where the curvilinear boundary is digitally represented. It must be noted that the balance area may result in a negative area. No rounding off of the rectilinear area and the balance area must be done prior to the summation of the areas to obtain the final area of the land parcel.

Where the land parcel has a circular boundary, then the area is calculated similarly to a curvilinear boundary, with the balance area being calculated for the area of the segment of the circle formed by the end points of the circular boundary.

When a land parcel is subdivided from its parent land parcel then the area of the subdivision must be deducted from the area of the parent land parcel to give a new area, called remaining extent, for the parent land parcel.

2.5.15 Cadastral Plan

A newly created land parcel, by subdivision or consolidation, must be represented on record as a cadastral plan. Such cadastral plan will be called a subdivisional cadastral plan or consolidated cadastral plan respectively.

A newly created oil, gas or mining right area must be represented on record as a cadastral plan. Such cadastral plan will be called an oil area cadastral plan or gas area cadastral plan or mining area cadastral plan respectively.

A third-party right over a land parcel that is created over an existing land parcel, must be represented on a cadastral plan. Such cadastral plan will be called a right of easement cadastral plan.

The land parcel or rights area must be represented on the cadastral plan by a geometrically correct figure, with the cadastral or similar boundaries represented in an accurate manner.

When the end points of the boundaries are in close proximity to each other or for the clear depiction of third-party rights, and their relative positions cannot be clearly shown, they must be represented on an inset.

The positions and designations of contiguous land parcels must be indicated on the cadastral plan.

When it is necessary for the purpose of registration to represent on the cadastral plan the boundaries of land parcels held under different tenures or conditions of title, such boundaries must be represented by broken lines and must be lettered.

The figure representing the cadastral boundaries of the land parcel must be clearly defined and recorded as follows:

- The endpoints of the cadastral boundaries must be lettered alphabetically, in capital letters, in a clockwise direction.
- Where applicable, the indicatory point to an end point must be lettered, in lower case letters, with the same letter as the end point for which it is the indicatory point.
- Where natural boundaries occur, these must be accurately depicted with the correct geometric representation. The part of the feature that is the cadastral boundary must be unambiguously given.

The land parcel represented on the cadastral plan must be clearly described by the figure depicting it and by its designation, for example “The figure A, B, C, middle of stream, D, E represents Plot 258, situated in the district of Al Safa, Jeddah.”

All rights of easement that the land parcel is encumbered by, either existing or newly created, must be depicted on the cadastral plan.

For a third-party right which is not situated at ground level, a side-elevation view of the third-party right must be given on the cadastral plan. The point at which the elevation above mean sea level is given must be clearly depicted. In cases where the elevation cannot be given and the height above the control survey points is given, the position of the control survey points must be depicted on the cadastral plan. The elevation above mean sea level or the height above the control survey points must be given in meters, to two decimals of a meter, in the tabulated data.

In the case where the cadastral plan is for the representation of an oil, gas, mining area or other real right in the land then the cadastral plan must be marked as such. In such cases, the designation must clearly indicate the real right for which the cadastral plan represents.

In the case of a land parcel created by consolidation, the designation must include the designations of each constituent land parcel that it is created from.

The area of the land parcel depicted must be given, and must be given in square meters, to the nearest square meter for areas under 10,000 square meters, and in hectares, to four decimals of a hectare for areas of 1Ha and greater.

The direction of true north must be depicted on the cadastral plan.

A clear and concise description of the cadastral monument of each end point or indicatory point must be given on the cadastral plan.

The cadastral plan must give, in tabular form, the coordinates of each cadastral boundary end point and, where applicable, each indicatory point, and the distance and direction of each straight-line cadastral boundary. Where a circular boundary occurs the radius of the circle must be given. The coordinates must be given in meters to two decimal places. The distances must be given in meters to two decimal places. The directions must be given in degrees, minutes, and seconds.

The data given on the cadastral plan must be consistent. This must be checked through a data traverse of the rectilinear figure depicted. The closure of the data traverse must not exceed:

$$0{,}02 + \frac{p\sqrt{n}}{10000} \text{ meters}$$

Where:

p = the length of the perimeter in meters, and
n = the number of sides of the rectilinear figure.

The responsible licensed cadastral surveyor must sign a certificate on the cadastral plan certifying that the cadastral plan has been prepared as surveyed by him/her or by consolidation. The name and professional registration number of the licensed cadastral surveyor must appear under the signature.

2.5.15.1 Cadastral General Plan

In cases where a land parcel is subdivided into 10 or more subdivisions then a cadastral general plan must be prepared in place of the 10 or more cadastral plans for the subdivision land parcels. The cadastral general plan will consist of the depiction of all of the subdivided land parcels together as one multi-parcel depiction.

The cadastral general plan must depict each subdivision land parcel accurately in relation to each other. The designation number for each subdivision land parcel must be given within the area of its boundaries. The cadastral general plan must have a title clearly indicating all the subdivision land parcels contained in the cadastral general plan and the designation of the parent land parcel.

The direction and distance of each cadastral boundary must be depicted against its side of the figure. The directions must be given in degrees, minutes, and seconds. The distance must be given in meters to two decimal places.

Where the subdivision land parcels form a block of land parcels then the block corners must be clearly depicted. In such cases the direction of the block side will be given, as well as the distance of each subdivision land parcel.

The coordinates of all block corner points must be tabulated.

A clear and concise description of the cadastral monument of each end point or indicatory point must be given on the cadastral general plan.

The direction of true north must be depicted on the cadastral general plan.

Where a road is created between blocks of subdivision land parcels then the width of the road must be depicted and the connecting direction and distance between the respective block corners must be given.

The data given on a cadastral general plan must be consistent. The data must be checked and achieve the same accuracy requirements as for the data on a cadastral plan.

The responsible licensed cadastral surveyor must sign a certificate on the cadastral general plan certifying that the cadastral general plan has been prepared as surveyed by him/her. The name and professional registration number of the licensed cadastral surveyor must appear under the signature. (Gov. of South Africa, 2014).

The cadastral plan and cadastral general plan may be represented in a digital format using geospatial information systems (GIS) technology or computer-aided design (CAD) technology.

The competent authority in terms of mandate in the Kingdom of Saudi Arabia must approve the cadastral plan or cadastral general plan prior to it being used for the registration of any rights in land.

2.5.16 Survey Records and Reports

The licensed cadastral surveyor, or surveyor working under his/her supervision, must make field notes:

- Which must be neat, precise, complete, and readily intelligible in accordance with the usage of cadastral surveyors.
- Facts, readings, and observations must be recorded immediately after they are ascertained.
- Must clearly indicate information about features that are material to the survey, and all other information and documentation relevant to those field notes.
- The field notes must be dated with the date of the field work.
- The licensed cadastral surveyor must sign all field notes. Should the survey be undertaken by a surveyor working under supervision then both the surveyor making the field observations and the responsible licenced cadastral surveyor must sign the field notes.

The licensed cadastral surveyor must retain records of all field notes, preferably as digital records.

Angles and/or directions must be recorded in degrees, minutes, and seconds. (Surveying and Spatial Information Regulation, New South Wales, NSW, 2017).

The competent authority in terms of mandate in the Kingdom of Saudi Arabia must keep a copy of all cadastral plans that are approved, which must be kept in a secure record complying with all requirements of an archive. Access to all approved cadastral plans must be made through provision of a copy of such, at no cost to a licenced cadastral surveyor who is engaged in a cadastral survey that involves such cadastral plan, or to any other person or organisation upon the payment of a prescribed fee.

The competent authority in terms of mandate in the Kingdom of Saudi Arabia must compile a cadastral map from all approved cadastral plans, building units, using geospatial information technology. The cadastral map must also include the demarcation of:

- Oil, gas, and mining rights.
- Third-part rights over land parcels.
- Buildings for which there are rights in the building or building units.
- The designated number of each land parcels.
- Land which is reserved for public benefit.
- Roads with the name of the road, where available.

- Boundaries of urban areas, real estate areas, and government administration areas, together with the official name/number of such.
- International boundaries.

The cadastral map must be based on the SANSRS and UTM projection and coordinate system.

The cadastral map must comply with the National Standard for Geospatial Information (General Authority for Survey and Geospatial Information, GEOSA, 2023).

2.5.17 Approval of Cadastral Survey

Only a licensed cadastral surveyor, or a suitable qualified surveyor working under supervision of a licensed cadastral surveyor, may undertake any cadastral survey in the Kingdom of Saudi Arabia.

All cadastral surveys, with the cadastral plan and/or building unit plan, where applicable, must be submitted by the licensed cadastral surveyor to the competent authority in terms of mandate in the Kingdom of Saudi Arabia, for examination and approval.

The competent authority in terms of mandate in the Kingdom of Saudi Arabia must check that the cadastral survey and the cadastral plan complies with all requirements, including consistent descriptions and data, and that the land parcel(s)/building units created by survey do not cause an illegal or irregular transfer of rights. Should the competent authority in terms of mandate in the Kingdom of Saudi Arabia be satisfied that all requirements are met then the cadastral survey and the cadastral plan and /or building unit plan will be approved. If not, it will be rejected and returned to the licensed cadastral surveyor.

Upon approval of the cadastral plan or building unit plan the competent authority in terms of mandate in the Kingdom of Saudi Arabia must inform the Real Estate General Authority (REGA) for all cadastral plans or building unit plan that falls within a designated real estate area.

The Real Estate General Authority (REGA)must inform the competent authority in terms of mandate in the Kingdom of Saudi Arabia of any third-party rights registered against a land parcel or a change thereto.

2.5.18 Professional Responsibility

The licensed cadastral surveyor is professionally responsible for all aspects of a cadastral survey performed by himself/herself, or by any person working under his/her supervision.

The licensed cadastral surveyor must:

- Obtain all such information on public record as is necessary to locate or relocate the cadastral boundaries of any land to be surveyed.
- Ascertain the positions of cadastral monuments relevant to the survey.
- Locate or relocate the cadastral boundaries of the land surveyed.
- Place appropriate cadastral monuments for the survey.
- Must use the survey method(s) deemed most appropriate for the purpose and accuracy requirements of the cadastral survey. In doing so, the licensed cadastral surveyor must take into account the fitness for purpose for the cadastral survey.
- Ensure that all equipment used in the survey must be calibrated to a reliable measure of distance, angular or position. The licensed cadastral surveyor must keep records of calibration results and carry out sufficient analysis of the data to prove that the equipment is calibrated correctly and operating in accordance with the manufacturer's guidelines; ().
- Ensure that any survey equipment used for the survey is capable of achieving the accuracy stated in this guideline.
- Promptly answer, and comply with, any requisitions from the competent authority in terms of mandate in the Kingdom of Saudi Arabia.
- Must act in a professionally ethical manner to ensure that no unlawful transfer of rights in land takes place through a cadastral survey.

2.5.19 Cadastral Surveys – General

The placement of new cadastral monuments, and the verification and replacement/re-establishment of cadastral monuments, are usually done from the coordinates of the endpoint or indicatory point.

In cases where a number of new subdivision land parcels are being surveyed and have the cadastral boundaries along a straight line then the individual cadastral monuments can be placed by in line measurement at the given distance between successive end points, which fall on the same straight line.

In cases where a fence post or other permanent object is used as the cadastral monument then the position of such must be determined by survey using various methods, such as Global Navigation Satellite System (GNSS), Total Positioning Systems (TPS), photogrammetry or from ortho-imagery where it can be positively identified.

The position of natural boundaries, including mean high-water mark, can be determined by survey using various methods, such as GNSS, TPS, photogrammetry or from ortho-imagery. The proviso being that the position of the cadastral boundary can be accurately identified and measured.

In all cases, the placement of cadastral monuments must be checked through independent survey measurement.

2.6 Land Surveying Methods

2.6.1 Purpose

Various surveying methods and equipment and systems are available to be used in performing land surveys. The most commonly used are discussed below. The selection of the method, equipment and system must be based on the purpose of the survey and the accuracy required for that purpose. It is the responsibility of the surveyor to ensure that the appropriate method, equipment, and systems are used to achieve the purpose and accuracies of the survey. It is also the responsibility of the surveyor to ensure that all the measuring equipment is correctly calibrated prior to undertaking the survey.

2.6.2 Global Navigation Satellite System (GNSS)

2.6.2.1 General Considerations

The following sections provide guidance on the practice of GNSS surveying. Figure 11 shows how achievable accuracy typically improves with GNSS observation time. It also shows the various GNSS techniques along that continuum and the applications in which they are typically employed. The Static and Fast Static GNSS survey techniques enable greater control in the identification and removal of blunders and in minimizing the influence of various systematic biases.

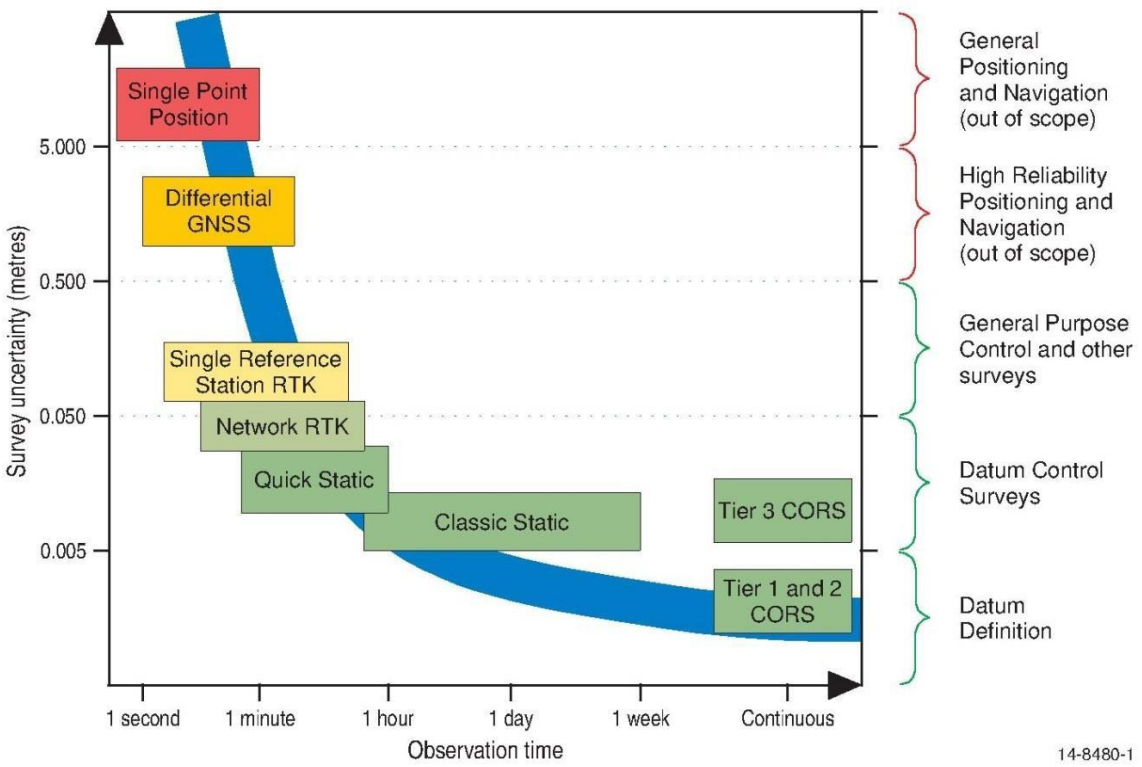

Figure 11: GNSS Survey Techniques

Static GNSS surveying involves the collection of precise code and carrier phase measurements recorded simultaneously at two or more survey control marks and/or Continuously Operating Reference Stations (CORS) using stand-alone GNSS equipment (comprised of a geodetic grade antenna and receiver). Static also typically involves post-processing by the surveyor. The Fast Static technique is similar to Static except that over shorter baselines lengths (e.g., less than 10 km) it is possible to observe for considerably less time and still achieve centimeter level accuracy.

Real-time GNSS surveys also involve the collection of precise code and carrier phase measurements with shorter occupation times than Static. There are two main types of real-time GNSS survey techniques:

- Single Reference Station Real-Time Kinematic (RTK), where the word "single" refers to the rover receiver connecting to only one reference station (either as a temporary setup or as a CORS) at any given time, even though more than one reference station may be used at different times across the project; and
- Network RTK surveys using a network of CORS.

The location and distribution of survey control marks in a GNSS survey is dependent on an optimum layout with sufficient redundancy to achieve the intent of the survey and any required guidelines. Unlike traditional terrestrial surveys, GNSS surveys are less dependent on factors such as network shape or mark inter-visibility.

Site selection and planning of observation sessions should aim to minimize the influence of internal and external effects. Factors that typically influence GNSS measurements include:

- GNSS system effects such as ephemeris error and satellite availability and geometry at each survey site.
- Atmospheric effects due to the ionosphere and troposphere.
- Site-dependent effects such as obstructions, multipath and interference from non- GNSS radio sources; and
- Instrumental effects, most noticeably un-modelled antenna phase center offsets.

Redundancy in the observations, absence of signal obstructions and longer observation times are well-accepted methods for minimizing the errors due to these effects.

The final estimation of survey mark positions is also influenced by effects external to the GNSS measurements themselves, and surveyors should incorporate procedures for minimizing blunders by checking mark identifiers, the centering and orientation of the antenna and the measurement of antenna heights.

2.6.2.1.1 Static Surveys

Given the three-dimensional nature of modern surveys, surveyors should be aware that achieving centimeter or millimeter level accuracy in ellipsoidal height requires significantly more attention than for horizontal position. The influence of GNSS observation time is particularly important for height. Longer observation times influence the achievable uncertainty of ellipsoidal heights by minimizing the effects of the atmosphere (especially troposphere in the case of heights) as well as satellite geometry and antenna models.

Given that the desired accuracy for ellipsoidal height dominates the selection of equipment, observation and processing techniques, the following sections are organized in two categories, namely "better than 20 mm" and "better than 50 mm". A general rule of thumb is that GNSS surveying achieves accuracies in ellipsoidal height that is approximately 1.5 to 2.0 times worse than for horizontal position. Therefor in using the recommended procedures in the following sections, it should be possible to achieve local accuracy for horizontal position that can be categorized as "better than 15 mm" and "better than 30 mm".

It should be noted that individual government departments may have additional requirements for GNSS control surveys and may issue supplementary advice.

2.6.2.1.2 Real-Time Surveys

It should be noted that real-time GNSS techniques are generally considered suitable for General Purpose Control Surveys only.

2.6.2.2 GNSS Equipment and Observation Techniques

2.6.2.2.1 Static Surveys

GNSS equipment and observation techniques employed have a direct impact on the uncertainty of the survey results. Table 9 lists the recommended GNSS observation techniques for Static and Fast Static surveys to achieve nominated levels of local accuracy.

Table 9: GNSS Observation Techniques for Static and Fast Static Surveys to Achieve Nominated Levels of Local Accuracy

Local Accuracy < 15 mm for horizontal position **Local Accuracy < 20 mm for ellipsoidal height**	**Local Accuracy < 30 mm for horizontal position** **Local Accuracy < 50 mm for ellipsoidal height**
Technique:	
Static	Static, Fast Static acceptable for baselines less than 10 km
Receiver:	
Capable of dual frequency code and carrier phase tracking	
Antenna:	
Choke ring or ground-plane	Survey quality
High quality tripod, tribrach, and optical plummet	
Session length:	
6 to 24 hours depending on baseline length	Static: 1 to 6 hours depending on baseline length. Recommend 1 hour plus five minutes per 1km. Fast Static: manufacturer recommendations for ambiguity resolution given baseline length and number of satellites
Observation epoch interval maximum:	
30 seconds	Static: 15 to 30 seconds Fast Static: 5 to 15 seconds
Other:	
Independent occupations recommended (with 30-minute gap and reset of antenna if on tripod)	
Elevation mask set to record down to zero degrees elevation	
Antenna orientated to within 5 degrees of true North	
Datum connection to at least two survey control marks being either marks in the existing KSA-GRF adjustment or CORS	

All GNSS and ancillary equipment should be maintained and regularly checked for accuracy and be in sound working order. Testing of receiver and antenna after firmware upgrade is also recommended.

2.6.2.2.2 Real-Time Surveys

Given that marks are typically only occupied for a short time during real-time surveys, site selection and survey planning should pay special attention to minimizing site dependent effects such as multipath, interference and obstructions. Other influences that should also be minimized include GNSS system effects, atmospheric effects, and instrumental effects.

Selection of suitable communications equipment is also crucial in real-time GNSS surveying. Dedicated radios or an internet connection via mobile phone may be used. Therefore, radio range, radio licensing and/or mobile phone coverage are also important considerations.

Table 10 lists the recommended GNSS observation techniques for single reference station RTK and network RTK to achieve nominal horizontal and vertical accuracy levels. Note that the accuracy levels nominated in the following tables are indicative of the upper limits of local accuracies typical with real-time GNSS Surveys. The

actual local accuracy achieved will be dependent on the guidelines of the receivers and antennas used and on the distance between the rover and reference station(s). It should also be noted that the propagation of uncertainty is different between Single Reference Station RTK and Network RTK.

Table 10: GNSS Equipment and Observation Techniques for Real-Time Surveys

Local Accuracy < 40 mm for horizontal position **Local Accuracy < 60 mm for ellipsoidal height**	
Technique:	
Single Reference Station RTK	Network RTK
Receiver:	
Dual frequency code and carrier phase tracking	
Antenna:	
Survey quality antenna for rover and reference station(s)	
Fixed height pole and bipod for rover	
Reference station establishment:	
Tripod, tribrach and optical plummet setup over a survey control mark. Where multiple reference stations are used, the internal consistency of the RTK survey relies on minimizing accuracies between the reference stations: • Use existing coordinated marks (KSA-GRF adjustment) • For new marks, undertake a Static or Fast Static GNSS survey between the reference station marks and connect to Datum (see below).	
Connection to datum:	
Connect the reference station survey to at least two survey control marks (KSA-GRF adjustment). Check on existing control to verify that datum and other settings in reference station and rover are correct. Using a different reference station location for the second rover occupation can help isolate any problems with reference station data.	
Connection to KSA-VRF:	
Where KSA-VRF is required on new marks, it is recommended to occupy at least two existing KSA-VRF marks to check KSA-Geoid fit in the project area.	
Rover range:	
Distance between reference station and rover should typically be less than 20 km.	Rover should only work within the Network RTK coverage area recommended by the service provider.
Checking rover occupations:	
All rover marks occupied twice, ideally with 30 minutes between occupations.	
Rover session length:	
Record and average positions for at least 1 minute after the rover has successfully initialized (i.e., after ambiguity resolution).	
Observation epoch interval at reference station and rover:	
1 second logging of the raw GNSS data is recommended to enable post-processing if checks are required at a later date.	
Elevation mask at reference station and rover:	
15 degrees	

All GNSS and ancillary equipment should be maintained and regularly checked for accuracy and be in sound working order. Testing of receiver and antenna after firmware upgrade is also recommended.

2.6.2.3 GNSS Processing Procedures

2.6.2.3.1 Static Surveys

Surveyors should use sufficiently comprehensive processing software in order to achieve reliable estimates for GNSS baselines and baseline uncertainties. As with GNSS hardware, GNSS manufacturers offer a variety of software products designed for post-processing high-precision GNSS measurements. Furthermore, attention should be given to gathering sufficient information and the models required to minimize the relevant biases, and care should be exercised when configuring the processing parameters. Table 11 lists the recommended GNSS processing procedures to achieve nominated levels of local accuracy for Static and Fast Static surveys.

Table 11: Minimum GNSS Processing Software Recommendations for Static and Fast Static Surveys

Local Accuracy < 15 mm for horizontal position **Local Accuracy < 20 mm for ellipsoidal height**	**Local Accuracy < 30 mm for horizontal position** **Local Accuracy < 50 mm for ellipsoidal height**
GNSS processing software:	
Capability to generate a reliable variance-covariance matrix for each measurement	
GNSS antenna model:	
IGS/NGS	Software supplied
Satellite ephemeris:	
Final ephemerides	Final, Rapid or Ultra-Rapid ephemerides or Broadcast Ephemerides
Datum reference station:	
GNSS baselines should be processed from a known starting point (i.e., reference station) with the best available, datum aligned coordinates.	
Independent baselines:	
Only independently derived baselines should be generated from GNSS processing. Avoid trivial baselines for subsequent adjustment and analysis.	

2.6.3 Optical Surveying Methods

2.6.3.1 Total Positioning System (TPS)

2.6.3.1.1 Equipment

Total station instruments incorporate an Electronic Distance Measurement (EDM), which is used to measure direct distances, and an electronic theodolite which is used to measure horizontal and zenith angles between the instrument and target. There are many different types of total stations available, which are designed for a variety of different applications and precision requirements. There are also many different types of ancillary equipment (prisms, levelling and centering devices, tripods, etc.) that are used with survey total stations. All total station instruments and ancillary equipment should be uniquely identified (e.g., via serial number) and calibrated on a regular basis.

Table 12 lists the equipment recommendations to achieve varying levels of local accuracy.

Table 12: Equipment Recommendations

Local Accuracy: < 2 mm	Local Accuracy: < 10 mm	Local Accuracy: < 30 mm
EDM distance measuring accuracy:		
± 1 mm + 1.5 ppm	± 3 mm + 3 ppm	± 5 mm + 5 ppm
Angle measuring accuracy:		
1”	5”	10”
Instrument specific:		
EDM instrument calibrated to national standard of length annually		
Instrument corrections applied (index and scale corrections)		
Reflector additive constant applied		
Reflector-less EDM should not be used to measure to survey control marks		
EDM Automatic Target Recognition (ATR) functionality acceptable		
1st velocity atmospheric correction applied:		
Yes		N/A
Atmospheric measurement device accuracy:		
T = 1° C, P = 1 mb, H = 2%		N/A
Prism:		
Precision prism, centering accuracy 0.5 mm	Circular prism, centering accuracy 1 mm	Prism, centering accuracy 2 mm
Tribrach and carrier:		
Precision carrier with optical plummet, plummet accuracy 0.5 mm at 1.5 meter	Tribrach with optical plummet, or laser plummet	
Tripod:		
Heavy duty, wooden, good condition	Good condition	

2.6.3.1.2 Survey Procedures

For the observation of survey control marks, Table 13 lists the recommended survey procedures to achieve varying levels of local accuracies.

Table 13: Observation Techniques

Local Accuracy: < 2 mm	**Local Accuracy: < 10 mm**	**Local Accuracy: < 30 mm**
Survey specific:		
Traditional survey traverse techniques – face left/face right, back sight/fore sight.		
Level instrument and targets directly over survey control marks.		
Height of instrument and targets measured.		
Collimation test to be performed:		
Daily	Weekly	
Number of rounds face left/face right:		
5	3	2
Residual from mean of any angle should not exceed:		
5”	10”	20”
Minimum ground clearance:		
1.0 meter	0.5 meter	
Atmospheric corrections:		
Atmospherics recorded at 1-hour intervals or pronounced changes in conditions.		N/A
Atmospherics either entered into instrument or applied in processing stages.		N/A

2.6.3.2 Differential Digital Levelling

Differential levelling with an optical or digital level instrument to a graduated level staff is the conventional method of determining the differences in height between survey control marks.

2.6.3.2.1 Differential Levelling Equipment

Table 14 below**Error! Reference source not found.** lists the recommended differential levelling equipment requirements to achieve various levels of survey misclosure.

where k = distance in kilometers

Table 14: Differential Levelling Equipment Recommendations

Quality - Maximum allowable misclosure (between forward and back)		
2 mm * √k (km)	6 mm * √k (km)	12 mm * √k (km)
Instrument:		
0.4 mm/km digital level	1 mm/km digital level	2 mm/km optical or digital level
Vertical collimation test:		
daily	daily	start of project
Graduated (or coded) staff:		

Calibrated, rigid invar staff, (+ bi-pole support)	Wood or fiberglass staff, calibrated within 5 years	Wood or fiberglass staff, calibrated within 5 years
Staff bubble attached and accurate to 10' verticality		
Tripod:		
Rigid		Telescopic
Change plates:		
Heavy duty change plates	Standard change plates	Standard change plates
Thermometer accurate to:		
1° C		

2.6.3.2.2 Differential Levelling Observation Techniques

The differential levelling observation techniques employed have a direct impact on the quality of the survey results. **Error! Reference source not found.** Table 15 lists the recommended differential levelling observation techniques and survey practices to achieve various levels of height difference survey misclosure.

where k = distance in kilometers

Table 15: Differential Levelling Observation Techniques

Quality - Maximum allowable misclose (between forward and back)		
2 mm * √k (km)	6 mm * √k (km)	12 mm * √k (km)
Survey specific:		
Two-way levelling[1]		
Avoid staff index error – observe same staff for first backsight and last foresight		
Back-sight/fore-sight lengths (total between survey control marks):		
Individual sights approximately equal Total difference within 1 meter	Total difference approximately equal	
Staff readings to nearest:		
0.1 mm. Mean of five readings with a standard deviation of ≤0.0002 m/20 m	0.1 mm. Mean of three readings with a standard deviation of ≤0.001 m/20 m	1 mm
Temperature recorded:		
Start and at 1-hour intervals or pronounced changes in conditions		
Maximum sight length:		
30 m	50 m	80 m
Minimum ground clearance:		
0.5 m	0.3 m	0.3 m

[1] Two-way levelling means two independent levelling surveys between two or more permanent marks in each direction. For example, survey one is from Point A to Point B to Point C and a survey two is from Point C to Point B to Point A.

2.6.3.3 Total Station Differential Levelling

Total station differential levelling is a variant of conventional differential levelling. Differences in height can be determined by making a series of zenith angle and slope distance observations to prisms mounted on fixed height poles. This technique is conducted in the same fashion as conventional two-way differential levelling.

2.6.3.3.1 Total Station Differential Levelling Equipment

Table 16 lists the recommended total station levelling equipment requirements to achieve various levels of survey misclosure.

where k = distance in kilometers

Table 16: Total Station Levelling Equipment Recommendations

Quality - Maximum allowable misclosure (between forward and back)		
2 mm * √k (km)	6 mm * √k (km)	12 mm * √k (km)
Total station instrument standard deviation:		
Distance: ± 1 mm + 1 ppm Zenith angle: 1”	Distance: ± 2 mm + 2 ppm Zenith angle: 3”	Distance: ± 3 mm + 2 ppm Zenith angle: 5”
Daily calibration of index errors of vertical circle and level sensor		
Accuracy of level sensor or compensator:		
0.5”	1.5”	2.5”
Atmospheric measurement device (accurate to):		
Temperature =1° C, Pressure =1 mb, Relative Humidity=2%		N/A
Tripod:		
Rigid		Telescopic
Fixed height reflector rod with bi-pole support:		
Staff bubble attached and accurate to 10’ verticality		
Solid fixed height rod (e.g., stainless steel)		Fixed height ensured
Permanently mounted, balanced and tilting prism:		
Precision prism		General prism
Change plates:		
Heavy duty change plates	Standard change plates	Standard change plates

2.6.3.3.2 Total Station Differential Levelling Observation Techniques

The total station differential levelling observation techniques employed have a direct impact on the quality of the survey results. Two fixed height poles and prism sets should be used to perform simultaneous observations and suitable change plates should be used on the base of the prism poles.

Table 17 below lists the recommended total station differential levelling observation techniques and survey practices to achieve various levels of height difference survey misclosure.

where k = distance in kilometers

Table 17: Total Station Differential Levelling Observation Techniques

Quality - Maximum allowable misclosure (between forward and back)		
2 mm * √k (km)	6 mm * √k (km)	12 mm * √k (km)
Survey specific:		
Two-way levelling		
Avoid fixed rod index error - observe same rod for first backsight / last foresight		
Atmospherics recorded and applied:		
Start and at 1-hour intervals or pronounced changes in conditions		N/A
Back-sight and fore-sight lengths (total between survey control marks):		
Approximately equal and measured to 1 meter	Total difference approximately equal	
Number of rounds face left/face right:		
5	4	3
Height difference readings to nearest:		
0.1 mm	0.5 mm	1 mm
Maximum sight length:		
50 m	80 m	120 m
Minimum ground clearance:		
1.0 m	0.5 m	

2.6.4 Remote Sensing and Imaging Methods

2.6.4.1 Photogrammetry

Points which can be positively identified on overlapping imagery, from imaging sensors in UAV (drone), aircraft or satellite platforms, can have their coordinates measured using photogrammetric methods.

Natural features which are used for cadastral boundaries and can be positively identified on the overlapping imagery can have their positions measured using photogrammetric methods.

Distances between identifiable points on the overlapping imagery can be measured using photogrammetric methods.

The Guidelines for Aerial Surveying for the Kingdom of Saudi Arabia () and Guidelines for Remote Sensing ARD for the Kingdom of Saudi Arabia () are applicable.

2.6.4.2 Unmanned Aerial Vehicle (UAV)

An unmanned aerial vehicle (UAV), or commonly called a drone, is an aerial platform for carrying one or more sensors for various purposes. These sensors may include LiDAR and multispectral imaging sensors. The sensors used will depend on the purpose of the survey. A UAV will usually be used when the survey area is not extensive, being more economical for small areas than other methods of survey, or when the level of accuracy is not high, or when a rapid survey is required.

For guidelines for UAV (drone) surveys refer to the Guidelines for Aerial Surveying for the Kingdom of Saudi Arabia () and the Guidelines for Remote Sensing Analysis Ready Data for the Kingdom of Saudi Arabia ().

2.6.4.3 Ortho-Imagery for Cadastral Surveys

Points which can be positively identified on ortho-imagery, from imaging sensors in UAV (drone), aircraft or satellite platforms, can have their coordinates measured directly from the ortho-image.

Natural features which are used for cadastral boundaries and can be positively identified on the ortho-image can have their positions measured directly from the ortho-image.

Distances between identifiable points on the ortho-image can be measured directly from the ortho-image.

The Guidelines for Aerial Surveying for the Kingdom of Saudi Arabia () and the Guidelines for Remote Sensing Analysis Ready Data for the Kingdom of Saudi Arabia () are applicable.

2.6.5 Terrestrial 3D Laser Scanning (Stationary)

Terrestrial 3D Laser Scanning (TLS) or Light Detection and Ranging (LiDAR) systems use lasers to make measurements from an instrument mounted on a tripod or other stationary mount, usually high enough to provide ground clearance. The laser device scans a defined field of view. The instrument may rotate, creating a series of scans across the rotated field – the most common of which is a 360° scan.

The raw data product of a laser scan survey is a point cloud with Laser Return Intensity values. Laser scan measurements that are perpendicular to a surface will produce better accuracies than those with a large angle of incidence to the surface. The larger the incidence angle, the more the beam can elongate, producing errors in the distance returned. Atmospheric factors such as heat radiation, rain, dust, and fog will also limit scanner effective range.

Laser scanning can be performed in two modes, absolute and relative. In the former the instrument is set up over a control point and scanning control points are included in the point cloud. Such scanned point clouds can then be oriented and scaled to provide a point cloud in the reference coordinate system. In the latter case, the point cloud created is relative to the instrument set up and will be used for relative positions or distance determination. The latter case is often used in building unit surveys for the measurement of distances across the building unit.

The laser beam can cause damage to the eye and eye safety measures must be adhered to when operating a TLS. This not only applies to surveying personnel on site but also to the eye safety of the public and animals, and the equipment must be operated in a manner to ensure the eye safety of all.

Care should be taken to ensure that the final dataset does not include any portion of point cloud data whose accuracy is compromised by measurements outside the useful range of the scanner. Surface properties including color, surface reflectivity, surface texture, and angle of incidence can limit the scanner's useful range.

The size of the scanner target, laser spot size, distance from the scanner, and target scan resolution determine how precisely the target reference locations can be determined. The operator should follow the manufacturer's recommended targets, distance for placement of targets, and target scan resolution.

When occupying a known control point, ensure the instrument is over the point, measure and record the height of instrument and height of targets at the beginning of each set-up.

TLS data collection shall be conducted in such a manner as to ensure redundancy of the data through overlapping scans. The data should be collected so that there is a minimum 5% to 20% from one scan to the next adjacent scan. When using cloud to cloud registration overlap can be as much as 75%.

Survey data points collected using TLS data are checked by various means including comparing scan points to validation points, reviewing the digital terrain model, reviewing data terrain lines in plan and profile, and redundant measurements. Redundant measurements with TLS can only be accomplished by scanner set-ups that offer overlapping coverage. Plan and profile views of overlapping registered point clouds should indicate precise alignment and data density of less than 0.01-meter vertical at scan seams.

The LiDAR point clouds must be processed into models, which must be in a format ready for further processing in a CAD or GIS environment. The accuracy requirements stipulated are for the model data and not the point cloud data.

A TLS Quality Management Plan (QMP) must be provided and include descriptions of the proposed quality control (QC) and quality assurance (QA) plan. (California Department of Transportation, CALTRANS, 2018).

2.6.6 Laser Distance Meter (hand-held)

Laser Distance Meter instruments may be used for measuring distances of up to 30 meters in length. The offset from the measuring base to the laser center must be accurately calibrated. The distance measured may be either horizontal distance or vertical distance. For horizontal distances the instrument must be held accurately in a horizontal position. For vertical distances the instrument must be held accurately in a vertical position. The surface point which is measured to must be discernable.

Such a method of distance measurement is commonly used in surveys of building units, or for measuring off-set distances.

2.6.7 Mobile Mapping System

A mobile mapping system (MMS), which includes Simultaneous Localization and Mapping (SLAM) technology, are particularly used when a survey must be performed rapidly. This may include for topographical surveys when site occupation time is limited, or engineering survey for post-construction survey or maintenance monitoring. The mobile platform can be a vehicle, a backpack carried by a human, or a remotely controlled self-propelled platform (e.g., smart dog).

An MMS usually consists of a LiDAR, 360° panoramic digital camera, distance measuring instrument, and positioning systems (GNSS, inertial navigation system and inertia measurement unit (IMU)). These units must be co-located on a single stable mount to maintain their relative position and orientation accurately. Also, the unit must be able to control all these components and be capable of synchronizing the timing of all measurements and records of the collected data.

The survey must be conducted using the most appropriate system to meet the purpose of the survey required in terms of efficiency, safety, and survey accuracy, and to comply with all relevant legal requirements.

The minimum technical requirements of the equipment shall be as given in the Table 18 below:

Table 18: Technical Requirements for Mobile Mapping System

(Construction Industry Council, 2021)

	Vehicle-based Mobile Mapping System (mainly for outdoor scanning or tunnel scanning)	**Backpack Mobile Mapping System (for both indoor and outdoor scanning)**	**Hand-held Laser Scanner (mainly for indoor scanning and some specific outdoor scanning)**
Components	GNSS+IMU+ DMI (optional)	GNSS+IMU or SLAM	IMU or SLAM
360° panoramic or spherical camera	Required	Required	Optional
3D horizontal and vertical positional accuracy relative to survey control points	3D: ± 30 mm	3D: ±50 mm (under open sky area)	3D: ± 10 mm
Field of view (FOV) of laser sensors	360°	360°	360°
Operation range	At least 100m	50m to 100m	At least 10m
Measurement rate	Up to 300 kHz	Up to 300 kHz	Up to 300 kHz
Laser classification	Eye safe (Laser Class 1)	Eye safe (Laser Class 1)	Eye safe (Laser Class 1)

The data acquisition routes (paths) to be traversed must be carefully planned, taking into account the terrain of the area, the occurrence of vegetation, particularly large trees, the occurrence of buildings and other structures, the obstruction of GNSS signals, and 'dead ground'. Additional routes may be required to ensure complete coverage of the area under survey.

Independent data acquisition must be undertaken for checking purposes.

The proposed speed of the mobile platform must take into account the safety requirements, the quality control process adopted, and the procedures for checking the MMS data quality to ensure achievement of the stated accuracy.

The location of the network of CORS stations must be assessed to determine if the required accuracy will be achieved. It may be necessary to set up a GNSS base station at the survey control points for the project area.
The LiDAR point clouds must be processed into models, which must be in a format ready for further processing in a CAD or GIS environment. The accuracy requirements stipulated are for the model data and not the point cloud data.

3. Supplementary Informative Elements

3.1 Kingdom of Saudi Arabian (KSA) National Geospatial Feature Concept Dictionary

The Table 19 below lists the Kingdom of Saudi Arabian (KSA) National Geospatial Feature Concept Dictionary (as of December 2022). Table 20 identifies the theme associated with the Theme ID. (both General Authority for Survey and Geospatial Information, GEOSA, 2022).

Table 19: KSA Feature Concept Register (as of December 2022)

Identifier	Label	Theme ID
AbsoluteGravityCalibrationLinePoint	Absolute Gravity Calibration Line Point	**sr**
AbsoluteGravityPoint	Absolute Gravity Point	**sr**
AbstractAdministrativeBoundary	Abstract Administrative Boundary	**ar**
AbstractHierarchicalAdministra- tiveUnit	Abstract Hierarchical Administrative Unit	**ar**
AbstractHydroFeature	Abstract Hydro Feature	**wa**
AbstractHydroPointOfInterest	Abstract Hydro Point of Interest	**wa**
AbstractManMadeObject	Man Made Object	**wa**
AbstractMarineLayer	Abstract Marine Layer	**wa**
AbstractProfileElementType	Abstract Profile Element Type	**ge**
AbstractSurfaceWater	Surface Water	**wa**
AbstractTerrestrialImage	Abstract Terrestrial Image	**im**
AbstractTransportType	Report	**tr**
AccessRestriction	Service	**tr**
Accident	Accident	**tr**
Address	Address	**na**
AddressComponent	Address Component	**na**
AdvertisementSign	Advertisement Sign	**tr**
AggregatedMosaicElement	Aggregated Mosaic Element	**im**
Airport	Airport	**tr**
AirportArea	Airport Area	**tr**
AnthropogenicGeomorphological-Feature	Anthropogenic Geomorphological Feature	**ge**
Aquiclude	Aquiclude	**ge**
Aquifer	Aquifer	**ge**
AquiferSystem	Aquifer System	**ge**
Aquitard	Aquitard	**ge**
BathymetricBreakLine	Bathymetric Breakline	**el**
BathymetricBreaklineCollection	Bathymetric Breakline Collection	**el**
BathymetricElevationContourLine	Bathymetric Contour Line	**el**
BathymetricElevationContourLine-Collection	Bathymetric Elevation Contour Line Collection	**el**
BathymetricElevationGridCoverage	Bathymetric Elevation Grid Coverage	**el**

Identifier	Label	Theme ID
BathymetricElevationTIN	Bathymetric Elevation TIN	**el**
BathymetricIsolatedArea	Bathymetric Isolated Area	**el**
BathymetricIsolatedAreaCollection	Bathymetric Isolated Area Collection	**el**
BathymetricVoidArea	Bathymetric Void Area	**el**
BathymetricVoidAreaCollection	Bathymetric Void Area Collection	**el**
BenchmarkLine	Benchmark Line	**sr**
BenchmarkPoint	Benchmark Point	**sr**
BenchmarkTideGaugePoint	Benchmark Tide Gauge Point	**sr**
BlackSpot	Black Spot	**tr**
Bollard	Bollard	**tr**
Borehole	Borehole	**ge**
Bridge	Bridge	**tr**
Building	Building	**lp**
BuildingUnit	Building Unit	**lp**
BusRoute	Bus Route	**tr**
BusRouteLink	Bus Route Link	**tr**
BusRouteLinkSequence	Bus Route Link Sequence	**tr**
BusStation	Bus Station	**tr**
BusStop	Bus Stop	**tr**
Campaign	Campaign	**ge**
CarriagewayLink	Carriageway Link	**tr**
CarriagewayNode	Carriageway Node	**tr**
CityName	City Name	**na**
Coastline	Coastline	**wa**
Commodity	Commodity	**ge**
ControlTower	Control Tower	**tr**
CORSNetwork	CORS Network	**sr**
CORSStation	CORS Station	**sr**
Culvert	Culvert	**tr**
Dam	Dam	**wa**
DepthArea	Depth Area	**el**
DepthAreaCollection	Depth Area Collection	**el**
DepthMap	Depth map	**im**
DesignSpeed	Design Speed	**tr**
DistrictName	District Name	**na**
Ditch	Ditch	**wa**
DrainageBasin	Drainage Basin	**wa**
EarthResource	Earth Resource	**ge**

Identifier	Label	Theme ID
ElevationGridCoverage	Elevation Grid Coverage	**el**
ElevationTIN	Elevation TIN	**el**
ElevationVectorObject	Elevation Vector Object	**el**
Embankment	Embankment	**ge**
Embankment	Embankment	**wa**
EngineeringStructure	Engineering Structure	**tr**
ExistingLandUseCollection	Existing Land Use Collection	**lu**
ExistingLandUseUnit	Existing Land Use Unit	**lu**
ExplorationActivity	Exploration Activity	**ge**
Falls	Falls	**wa**
Fence	Fence	**tr**
FloodRiskZone	Flood Risk Zone	**ge**
FluvialPoint	Fluvial Point	**wa**
Fold	Fold	**ge**
Ford	Ford	**wa**
FormOfWay	Form Of Way	**tr**
FuelStation	Fuel Station	**tr**
GenericContourLine	Generic Contour Line	**el**
GenericSpotElevation	Generic Spot Elevation	**el**
GeodeticControlNetwork	Geodetic Control Network	**sr**
GeodeticControlPoint	Geodetic Control Point	**sr**
GeologicalCollection	Geologic Collection	**ge**
GeologicalEvent	Geological Event	**ge**
GeologicalFeature	Geological Feature	**ge**
GeologicalStructure	Geological Structure	**ge**
GeologicalUnit	Geological Unit	**ge**
GeomorphologicalFeature	Geomorphological Feature	**ge**
GeophMeasurement	Geoph Measurement	**ge**
GeophObject	Geoph Object	**ge**
GeophObjectSet	Geoph Object Set	**ge**
GeophProfile	Geoph Profile	**ge**
GeophStation	Geoph Station	**ge**
GeophSwath	Geoph Swath	**ge**
GravimetricNetwork	Gravimetric Network	**sr**
GroundWaterBody	Ground Water Body	**ge**
HazardArea	Hazard Area	**ge**
HydrogeologicalObject	Hydrogeological Object	**ge**
HydrogeologicalObjectManMade	Hydrogeological Object Manmade	**ge**

Identifier	Label	Theme ID
HydrogeologicalObjectNatural	Hydrogeological Object Natural	**ge**
HydrogeologicalUnit	Hydrogeological Unit	**ge**
HydroNode	Hydro Node	**wa**
Image	Image	**im**
InterTidalArea	Inter Tidal Area	**wa**
ITSScreen	ITS Screen	**tr**
JunctionPoint	Junction Point	**sr**
LandBreakLine	Land Breakline	**el**
LandBreakLineCollection	Land Break Line Collection	**el**
LandCoverCollection	Land Cover Collection	**lc**
LandCoverGridCoverage	Land Cover Grid Coverage	**lc**
LandCoverNomenclature	Land Cover Nomenclature	**lc**
LandCoverUnit	Land Cover Unit	**lc**
LandElevationContourLine	Land Contour Line	**el**
LandElevationContourLineCollection	Land Elevation Contour Line Collection	**el**
LandElevationGridCoverage	Land Elevation Grid Coverage	**el**
LandElevationTIN	Land Elevation TIN	**el**
LandIsolatedArea	Land Isolated Area	**el**
LandIsolatedAreaCollection	Land Isolated Area Collection	**el**
LandSpotElevation	Land Spot Elevation	**el**
LandSpotElevationCollection	Land Spot Elevation Collection	**el**
LandUseGridCoverage	Land Use Grid Coverage	**lu**
LandVoidArea	Land Void Area	**el**
LandVoidAreaCollection	Land Void Area Collection	**el**
LandWaterBoundary	Land Water Boundary	**wa**
LASPointCloud	LAS Point Cloud	**el**
Lock	Lock	**wa**
MaintenanceAuthority	Maintenance Authority	**tr**
MapDocument	Map Document	**lu**
MappedFeature	Mapped Feature	**ge**
MappedInterval	Mapped Interval	**ge**
MarineCirculationZone	Marine Circulation Zone	**wa**
MarineExtent	Marine Extent	**wa**
MarkerPost	Marker Post	**tr**
MetroLine	Metro Line	**tr**
MetroLink	Metro Link	**tr**
MetroLinkSequence	Metro Link Sequence	**tr**
MetroNode	Metro Node	**tr**

Identifier	Label	Theme ID
MetroStation	Metro Station	**tr**
MetroStationArea	Metro Station Area	**tr**
MineralOccurrence	Mineral Occurrence	**ge**
MiningActivity	Mining Activity	**ge**
MosaicElement	Mosaic Element	**im**
MunicipalAdministrativeBoundary	Municipal Administrative Boundary	**ar**
MunicipalAdministrativeUnit	Municipal Administrative Unit	**ar**
NaturalGeomorphologicalFeature	Natural Geomorphological Feature	**ge**
NonAddressObject	Non-Addressable Object	**na**
ObliqueAirborneImage	Oblique Airborne Image	**im**
ObservedEvent	Observed Event	**ge**
OfficialDocument	Official Document	**lu**
OrthoImage	Orthoimage	**im**
OwnerAuthority	Owner Authority	**tr**
Parcel	Parcel	**lp**
ParcelLandUse	Parcel Land Use	**lu**
ParkingPayStation	Parking Pay Station	**tr**
Pathway	Pathway	**tr**
PedestrianArea	Pedestrian Area	**tr**
PhotogrammetricControlPoint	Photogrammetric Control Point	**im**
PlaceName	Place Name	**gn**
PlannedParcel	Planned Parcel	**lu**
PointOfInterest	Point Of Interest	**na**
RailwayArea	Railway Area	**tr**
RailwayLine	Railway Line	**tr**
RailwayLink	Railway Link	**tr**
RailwayLinkSequence	Railway Link Sequence	**tr**
RailwayNode	Railway Node	**tr**
RailwayStation	Railway Station	**tr**
RailwayStationArea	Railway Station Area	**tr**
Rapids	Rapids	**wa**
RegionalAdministrativeBoundary	Regional Administrative Boundary	**ar**
RegionalAdministrativeUnit	Regional Administrative Unit	**ar**
RegulationText	Regulation Text	**lu**
Report	Report	**ar**
RestrictionForVehicles	Restriction For Vehicles	**tr**
RetainingWall	Retaining Wall	**tr**
RiskZone	Risk Zone	**ge**

Identifier	Label	Theme ID
RiverBasin	River Basin	**wa**
Road	Road	**tr**
RoadArea	Road Area	**tr**
RoadEdge	Road Edge	**tr**
RoadFurniture	Road Furniture	**tr**
RoadIsland	Road Island	**tr**
RoadLaneLink	Road Lane Link	**tr**
RoadLaneNode	Road Lane Node	**tr**
RoadLink	Road Link	**tr**
RoadLinkSequence	Road Link Sequence	**tr**
RoadNode	Road Node	**tr**
RoadServiceArea	Road Service Area	**tr**
RoadShoulder	Road Shoulder	**tr**
RoadSign	Road Sign	**tr**
RoadSupplementaryRegulation	Road Supplementary Regulation	**lu**
SeaArea	Sea Area	**wa**
SeabedArea	Seabed Area	**wa**
Seaport	Seaport	**tr**
SeaportArea	Seaport Area	**tr**
SeaSurfaceArea	Sea Surface Area	**wa**
SegmentationMap	Segmentation Map	**im**
Service	Service	**ar**
ShearDisplacementStructure	Shear Displacement Structure	**ge**
Shore	Shore	**wa**
Shoreline	Shoreline	**wa**
ShorelineConstruction	Shoreline Construction	**tr**
ShorelineConstruction	Shoreline Construction	**wa**
ShoreSegment	Shore Segment	**wa**
SingleMosaicElement	Single Mosaic Element	**im**
Sluice	Sluice	**wa**
SoilBody	Soil Body	**ge**
SoilHorizon	Soil Horizon	**ge**
SoilLayer	Soil Layer	**ge**
SoilPlot	Soil Plot	**ge**
SoilProfile	Soil Profile	**ge**
SoilSite	Soil Site	**ge**
Sounding	Sounding	**el**
SoundingCollection	Sounding Collection	**el**

Identifier	Label	Theme ID
SpaceborneImage	Spaceborne Image	**im**
SpatialPlan	Spatial Plan	**lu**
SpatialUnit	Spatial Unit	**lp**
SpeedLimit	Speed Limit	**tr**
StandingWater	Standing Water	**wa**
StreetLight	Streetlight	**tr**
StreetName	Street Name	**na**
SupplementaryRegulation	Supplementary Regulation	**lu**
TaxiStation	Taxi Station	**tr**
TerrestrialImage	Terrestrial Image	**im**
ThematicClass	Thematic Class	**ge**
TrafficCamera	Traffic Camera	**tr**
TrafficCounter	Traffic Counter	**tr**
TrafficLight	Traffic Light	**tr**
TransportArea	Transport Area	**tr**
TransportLink	Transport Link	**tr**
TransportLinkSequence	Transport Link Sequence	**tr**
TransportLinkSet	Transport Link Set	**tr**
TransportNode	Transport Node	**tr**
TransportProperty	Transport Property	**tr**
Tunnel	Tunnel	**tr**
Underpass	Underpass	**tr**
UrbanBoundary	Urban Boundary	**lu**
VerticalAirborneImage	Vertical Airborne Image	**im**
VerticalControlNetwork	Vertical Control Network	**sr**
Watercourse	Water Course	**wa**
WatercourseLink	Watercourse Link	**wa**
WatercourseLinkSequence	Watercourse Link Sequence	**wa**
WatercourseSeparatedCrossing	Watercourse Separated Crossing	**wa**
WaterWell	Water Well	**ge**
WeighStation	Weigh Station	**tr**
Wetland	Wetland	**wa**
ZipCodeUnit	Zip Code Unit	**na**
ZoningElement	Zoning Element	**lu**

Table 20: KSA Foundation Themes with Theme Identifier

Theme ID	Theme	Theme ID	Theme

ar	Administrative Regions	el	Elevation
ge	Geology	im	Imagery
gn	Geographical Names	lu	Land Use
lp	Land Parcels	lc	Land Cover
na	National Address	sr	The Saudi Arabia National Spatial Reference System
tr	Transport	wa	Water

3.2 Secondary Topographical Feature List

Secondary topographical features are taken from the list of landmark symbols for topographic maps at scale 1:1000 of the Ministry for Municipal and Rural Areas and Housing (Ministry for Municipal and Rural Affairs, MOMRAH).

Table 21: Topographic Features - Adapted from Landmark Symbols for Topographic Maps at 1:1000.

S.#	Feature Names	Feature Code/ Graphic Group/ Carto Line Style
1	Airport Area Outline	**1001**
2	Built Up Area Outline	**1002**
5	Cemetery Outline	**1005**
8	Landing Strip Outline	**1008**
10	Misc. Area Outline	**1010**
11	Park Outline	**1011**
14	Pit Outline	**1014**
16	Quarry Outline	**1016**
18	Recreation Area Outline	**1018**
20	Refuse Dump Outline	**1021**
23	Benchmark	**1101**
24	Contour	**1102**
26	Control Point	**1104**
28	Government Building	**1106**
38	Utility	**1116**
49	Airport Building	**2001**
51	Building-General-Outline	**2003**
55	Building-Government	**2007**
57	Building-Ruin	**2009**
58	Building-Under Construction	**2010**
59	Castle Building	**2011**
61	Filling Station Building	**2013**

S.#	Feature Names	Feature Code/ Graphic Group/ Carto Line Style
63	Fire Station Building	2015
65	Generator/Sub-Station Building	2017
67	Lighthouse Building	2019
69	Medical Facility Building	2021
71	Microwave Relay Station Building	2023
73	Mosque Building	2025
75	Mosque Building (Friday)	2027
77	Municipality Building	2029
79	Police Station Building	2031
81	Post Office Building	2033
83	Public Telephone Office Building	2035
85	Public Toilet Building	2037
87	Pumping Station-Oil Building	2039
89	Pumping Station-Water Building	2041
91	Roof Level Change	2043
92	School/College/University Building	2044
94	Fence-Brick	3001
96	Fence-Iron and Brick	3003
97	Fence-Wire	3004
98	Gate	3005
99	Land Boundary	3006
100	Masonry-Sloping Outline	3007
102	Masonry-Vertical	3009
103	Miscellaneous Structure	3010
104	Miscellaneous Feature	3011
105	Stationary Crane Outline	3012
107	Steps Outline	3014
108	Steps Interior Pattern	3015
109	Swimming Pool Outline	3016
111	Airport Tarmac Outline	4001
112	Bridge	4002
113	Car Park-Paved Outline	4003
114	Car Park-Unpaved Outline	4004
116	Culvert	4006
117	Cutting	4007
118	Cutting Without Line	4008
119	Embankment	4009
120	Embankment without Line	4010
121	Ferry Route	4011

S.#	Feature Names	Feature Code/ Graphic Group/ Carto Line Style
123	Footbridge	**4013**
124	Footpath	**4014**
125	Railway Barrier	**4015**
126	Railway Line Single	**4016**
127	Railway Line Double	**4017**
128	Road-Shoulder	**4018**
129	Road-Paved Edge	**4019**
131	Road-Paved Centerline -- Clo	**4021**
133	Road Paved >15m-- NC Clx	**4023**
134	Road Paved >15m-- SCRA Clx	**4024**
135	Road Paved >15m-- DC Clx	**4025**
139	Road Paved 10-15m -- NC Clx	**4029**
140	Road Paved 10-15m -- SCRA Clx	**4030**
141	Road Paved 10-15m -- DC Clx	**4031**
145	Road Paved7-10m--NC Clx	**4035**
146	Road Paved7-10m--SCRA Clx	**4036**
147	Road Paved7-10m--DC Clx	**4037**
151	Road Paved5- 7m -- NC Clx	**4041**
152	Road Paved5- 7m -- SCRA Clx	**4042**
153	Road Paved5- 7m -- DC Clx	**4043**
157	Road Paved3- 5m -- NC Clx	**4047**
158	Road Paved3- 5m -- SCRA Clx	**4048**
159	Road Paved3- 5m -- DC Clx	**4049**
164	Road Paved >10m--Clo	**4054**
165	Road Paved5-10m--Clo	**4055**
166	Road Paved <5m--Clo	**4056**
170	Road-Unpaved Edge	**4060**
171	Road-Unpaved Edge-Clo	**4061**
172	Road-Unpaved Cntrln-Clx	**4062**
174	Road-U/C Edge	**4064**
175	Road-U/C Edge -- Clx	**4065**
176	Road-U/C Centerline -- Clx	**4066**
178	Taxi/Bus Station	**4068**
179	Track Edge	**4069**
180	Track Edge -- Clx	**4070**
181	Track Centerline -- Clx	**4071**
183	Tunnel Portal	**4073**
184	Tunnel Edge	**4074**
185	Tunnel Edge -- Clx	**4075**

S.#	Feature Names	Feature Code/ Graphic Group/ Carto Line Style
186	Tunnel Centerline -- Clx	**4076**
188	Driveway	**4078**
189	Electricity Line-High Voltage	**5001**
190	Electricity Line-Local	**5002**
191	Pipeline-Gas Above Ground	**5003**
192	Pipeline-Gas Below Ground	**5004**
193	Pipeline-Oil Above Ground	**5005**
194	Pipeline-Oil Below Ground	**5006**
195	Pipeline-Water Above Ground	**5007**
196	Pipeline-Water Below Ground	**5008**
197	Pole-Electric High Voltage	**5009**
198	Pole-Electrical Local	**5010**
199	Pole-Telephone	**5011**
200	Pylon To Scale	**5012**
201	Pylon Symbol	**5013**
202	Radio/Tv Antenna	**5014**
203	Streetlamp-Multiple	**5015**
204	Streetlamp-Left	**5016**
205	Streetlamp-Right	**5017**
206	Tank-Gas to Scale	**5018**
208	Tank-Oil to Scale	**5020**
210	Tank-Water to Scale	**5022**
212	Telephone Box	**5024**
213	Telephone Line	**5025**
214	Tower-Water to Scale	**5026**
216	Traffic Light	**5028**
217	Well-Oil	**5029**
218	Well-Water	**5030**
219	Manhole	**5031**
220	Benchmark-NGN	**6001**
221	Benchmark	**6002**
222	Control Point-NGN	**6003**
223	Control Point	**6004**
224	Block Outline	**6005**
225	Parcel Outline	**6006**
226	Street Segment	**6007**
227	Boundary-Int'l Marked	**6008**
228	Boundary-Int'l Unmarked	**6009**
230	Beach-Shingle Polygon	**7002**

S.#	Feature Names	Feature Code/ Graphic Group/ Carto Line Style
231	Breakwater, Pier, Quay	**7003**
232	Canal-Edge	**7004**
233	Canal-Centerline	**7005**
234	Canal > 25m Centerline	**7006**
235	Canal 10-25m Centerline	**7007**
236	Canal5-10m Centerline	**7008**
237	Coastal Rock	**7009**
238	Coastline-Definite	**7010**
239	Coastline-Indefinite	**7011**
240	Dam	**7012**
242	Ditch	**7014**
246	Lake Or Pond-Perennial	**7018**
247	Lake Or Pond-Dry	**7019**
249	Levee	**7021**
251	Marsh Or Swamp Polygon	**7023**
252	Mud Flat Pattern	**7024**
253	Mud Flat Polygon	**7025**
254	Reservoir-Perennial	**7026**
255	Reservoir-Dry	**7027**
256	River-Perennial	**7028**
257	Stream-Perennial	**7029**
258	Wadi Large Outline	**7030**
260	Wadi Small	**7032**
261	Water At Time of Air Photo	**7033**
263	Cliff	**8001**
270	DEM-Breakline	**8008**
273	DEM-Grid Point	**8011**
274	DEM-Random Point	**8012**
275	Spot Elevation	**8013**
276	Spot Elevation Rooftop	**8014**
277	Remove Exclusion Area	**8015**
278	DEM Approximate Area	**8016**
279	DEM Fault Line Top	**8017**
280	DEM Fault Line Bottom	**8018**
281	Cultivated Area Outline	**9001**
284	Garden Outline	**9004**
289	Hedge	**9009**
290	Orchard Outline	**9010**
293	Rock Outcrop	**9013**

S.#	Feature Names	Feature Code/ Graphic Group/ Carto Line Style
296	Palm Grove Outline	**9016**
300	Sand Area Polygon	**9020**
302	Sand Dune Area Polygon	**9022**
304	Scrub And Brush Polygon	**9024**
305	Tree-Landmark Non-Palm	**9025**
306	Tree-Landmark Palm	**9026**
307	Tree-Roadside/Ornamental	**9027**
310	Trees-Scattered Polygon	**9030**

3.3 Symbols, Acronyms and Abbreviations

Symbols, Acronyms and Abbreviations	Definition
ANSI/ISEA	American National Standards Institute / International Safety Equipment Association
ARD	Analysis Ready Data
ATR	Automatic Target Recognition
BCCs	Beginning of Circular Curves
BCs	Beginning of Curves
BTCs	Beginning of Transitional Curves
CAD	Computer-Aided Design
CORS	Continuously Operating Reference Station
DEM	Digital Elevation Model
DMI	Distance Measurement Instrument
ECs	End of Curves
EDM	Electronic Distance Measurement
EPSG	European Petroleum Survey Group
ETCs	End of Transitional Curves
FGDC	Federal Geographic Data Committee
GEOSA	General Authority for Survey and Geospatial Information, Kingdom of Saudi Arabia
GIS	Geographic Information Systems
GNSS	Global Navigation Satellite System
IGS/NGS	International GNSS Service / National Geodetic Survey
IMU	Inertia Measurement Unit

Symbols, Acronyms and Abbreviations	Definition
ISO	International Organization for Standardization
KSA	Kingdom of Saudi Arabia
KSA-GRF	Kingdom of Saudi Arabia – Geodetic Reference Frame
KSA-VRF	Kingdom of Saudi Arabia – Vertical Reference Frame
LiDAR	Light Detection and Ranging
MMS	Mobile Mapping System
QA	Quality Assurance
QC	Quality Control
QMP	Quality Management Plan
RTK	Real-Time Kinematic
SANSRS	Saudi Arabia National Spatial Reference System
SI	International System of Units, internationally known by the abbreviation SI (from French Système international d'unités)
SLAM	Simultaneous Localization and Mapping
TIN	Triangulated Irregular Network
TLS	Terrestrial 3D Laser Scanning
TPS	Total Positioning Systems
UAV	Unmanned Aerial Vehicle / Drone
UTM	Universal Transverse Mercator

3.4 References

1. California Department of Transportation (CALTRANS), April 2015. Survey Manual. Chapter 5. Accuracy Classifications and Standards. Available at: https://dot.ca.gov/-/media/dot-media/programs/right-of-way/documents/ls-manual/05-surveys-a11y.pdf , Accessed in March 2024.

2. California Department of Transportation (CALTRANS), December 2011. Survey Manual. Chapter 2. Safety. Available at: dot.ca.gov/-/media/dot-media/programs/right-of-way/documents/ls-manual/02-surveys-updated-a11y.pdf , Accessed in March 2024.

3. California Department of Transportation (CALTRANS), June 2018. Survey Manual. Chapter 15. Terrestrial Laser Scanning Guidelines. Available at: , Accessed in March 2024.

4. Committee of Transport Officials, April 2017. Technical Methods for Highways, Standard Survey Methods. TMH 11, Ver. 3.0. Available at: https://dms.dot.gov.za/share/s/z_jwjrNQTWmAgyLAHBQ2Rg , Accessed in March 2024.

5. Construction Industry Council, Hong Kong, 2021. Reference Materials - Sample Guideline for Provision of Surveying Services by a Mobile Mapping System with Laser Scanner. Available at: , Accessed in March 2024.

6. Federal Geographic Data Committee (FGDC), 1984. Standards and guidelines for geodetic control networks. Available at: , Accessed in March 2024.

7. Federal Geographic Data Committee (FGDC), 1998. Geospatial positioning accuracy standards, part 2: standards for geodetic networks. In FGDC-STD-007.2-1998. Available at: https://www.fgdc.gov/standards/projects/accuracy/part2/chapter2 , Accessed in March 2024.

8. Federal Geographic Data Committee (FGDC), 1998b. Geospatial positioning accuracy standards, part 3: National Standard for Spatial Data Accuracy. In FGDC-STD-007.3-1998. Available at: https://www.fgdc.gov/standards/projects/accuracy/part3/chapter3 , Accessed in March 2024.

9. General Authority for Survey and Geospatial Information (GEOSA), 2023. KSA National Geospatial Feature Concept Dictionary. Available at: https://www.geoportal.sa/Geoportal/NationalFeatureConceptDictionary , Accessed in March 2025.

10. General Authority for Survey and Geospatial Information (GEOSA). 2025. National Geospatial Data Policies and Standards for the Kingdom of Saudi Arabia. Available at: https://www.geoportal.sa/Geoportal/Geospatial-Governance , Accessed in March 2025.

11. General Authority for Survey and Geospatial Information (GEOSA). 2024. Guidelines for Geodesy for the Kingdom of Saudi Arabia. NTS.2024.1. KSA-Geodesy.Specs.V1.0.

12. General Authority for Survey and Geospatial Information. 2024. Guidelines for Aerial Surveying for the Kingdom of Saudi Arabia. KSA-Aerial_Surveying.Specs.V1.0.

13. General Authority for Survey and Geospatial Information. 2024. Guidelines for Remote Sensing for the Kingdom of Saudi Arabia. KSA-Remote_Sensing_ARD.Specs.V1.0.

14. Government of South Africa, 2014. Regulations Promulgated in terms of Section 10 of the Land Survey Act, 1997 (Act No. 8 of 1997). Government Notice 832. Available at: http://csg.drdlr.gov.za/LandSurveyRegulations.pdf , Accessed in March 2024.

15. Intergovernmental Committee on Surveying and Mapping (ICSM), ANZLIC Committee on Surveying and Mapping, December 2020. Standard for the Australian Survey Control Network. Special Publication 1, Ver. 2.2. Available at: https://www.icsm.gov.au/sites/default/files/2020-12/Standard-for-Australian-Survey-Control-Network_v2.2.pdf , Accessed in March 2024.

16. Joint Committee for Guides in Meteorology (JCGM), 2020. Guide to the expression of uncertainty in measurement – Part 6: Developing and using measurement models. Available at: https://www.bipm.org/documents/20126/50065290/JCGM_GUM_6_2020.pdf/d4e77d99-3870-0908-ff37-c1b6a230a337 , Accessed in March 2024.

17. Ministry for Municipal and Rural Affairs (MOMRAH), Saudi Arabia. Terrestrial Mapping. Appendix 4.

18. Ministry for Transport and Logistic Services, Saudi Arabia, 2023. Planning and Preliminary Studies. SHC 202: Surveying and Mapping (Draft).

19. National Geospatial Center - General Authority for Survey and Geospatial Information (GEOSA), May 2023. National Geospatial Data Policies and Standards for the Kingdom of Saudi Arabia. Available at: https://www.geosa.gov.sa/content/National_Geospatial_Data_Policies_and_Standards_For_The_Kingdom_of_Saudi_Arabia.html , Accessed in March 2024.

20. Natural Resources Canada, Surveyor General Branch, January 2022. National Standards for the Survey of Canada Lands. Ver. 1.2. Available at: https://publications.gc.ca/collections/collection_2022/rncan-nrcan/M124-8-2022-eng.pdf , Accessed in March 2024.

21. New South Wales (NSW) Department of Lands, 1975. Guidelines for Design and Marking Control Survey Traverses. Available at: , Accessed in March 2024.

22. New South Wales (NSW), 2017. Surveying and Spatial Information Regulation 2017, under the Surveying and Spatial Information Act 2002. Available at: https://legislation.nsw.gov.au/view/whole/html/inforce/current/sl-2017-0486 , Accessed in March 2024.

23. Official Translation Department, April 2002. Royal Decree No. M/6, Laws of Real Estate Registration.

24. Royal Institution of Chartered Surveyors (RICS), November 2014. Measured surveys of land, buildings, and utilities. RICS guidance note, global. 3rd edition. Available at: https://www.rics.org/profession-standards/rics-standards-and-guidance/sector-standards/land-standards/measured-surveys-of-land-buildings-and-utilities , Accessed in March 2024.

25. Schofield, W. and Breach, M., 2007. Engineering surveying. CRC Press. Available at: https://doi.org/10.1201/9781315147048 , Accessed in March 2024.

26. US Army Corps of Engineers (USACE), February 2011. Engineering and Design NAVSTAR Global Positioning System Surveying. EM 11101-1-1003. Available at: https://www.publications.usace.army.mil/Portals/76/Publications/EngineerManuals/EM_1110-1-1003.pdf , Accessed in March 2024.

27. US Army Corps of Engineers (USACE), February 2018. Engineering and Design. Structural Deformation Surveying. EM 11101-1-1009. Available at: https://www.publications.usace.army.mil/portals/76/publications/engineermanuals/em_1110-2-1009.pdf , Accessed in March 2024.

28. US Army Corps of Engineers (USACE), January 2007. Engineering and Design. Control and Topographic Surveying. EM 11101-1-1005. Available at: https://www.publications.usace.army.mil/portals/76/publications/engineermanuals/em_1110-1-1005.pdf , Accessed in March 2024.

29. US Army Corps of Engineers (USACE), March 2012. Engineering and Design. Survey Markers and Monumentation. EM 11101-1-1002. Available at: https://www.publications.usace.army.mil/portals/76/publications/engineermanuals/em_1110-1-1002.pdf , Accessed in March 2024.